ALLISON ROAD - RIO PUERCO BRIDGE REPLACEMENT
CONSTRUCTION PLANS

CITY OF GALLUP
McKINLEY COUNTY
CN 6100112, C6150942, C6151034, C6151029

ALLISON ROAD 0.37 MILES
FROM WAREHOUSE LANE
TO THE I-40 UNDERPASS

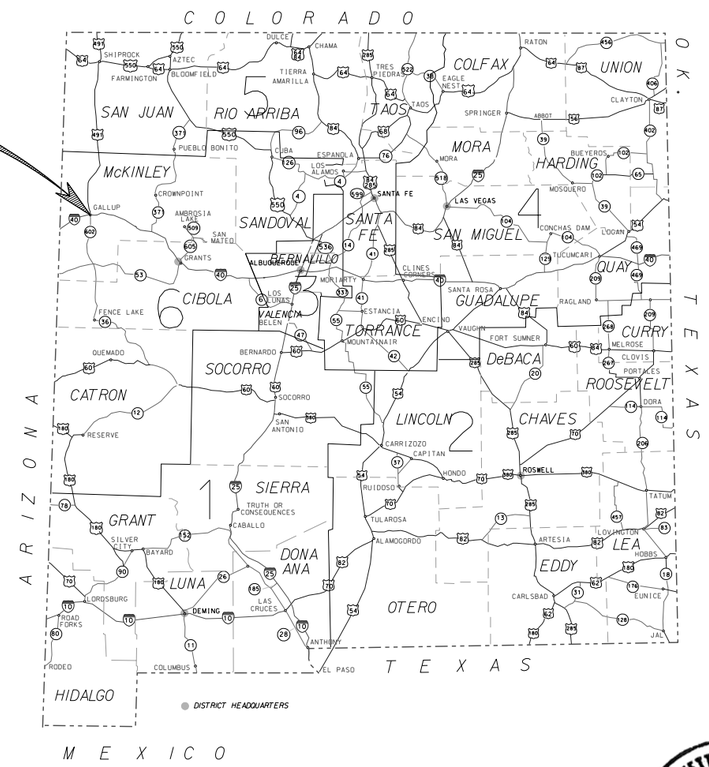

NMDOT

Bohannan Huston
www.bhinc.com 800.877.5332

NEW MEXICO PROJECT NO.	SHEET NO.
CN 6100112	1-2

Length Of Project 0.37 Miles

CONVENTIONAL SIGNS

ON PLAN

STATE LINE
COUNTY LINE
LAND GRANT LINE
TOWNSHIP OR RANGE LINE
SECTION LINE
CITY OR TOWN LIMIT
UNFENCED PROPERTY LINE
REFERENCE LINE & POINT
WIRE FENCE
RAIL FENCE
STONE OR ADOBE FENCE
PICKET FENCE
TELEPHONE-TELEGRAPH LINE
PROTECTION DITCH & DIKE
RETAINING WALL
ARROYO
RIVER OF CREEK
IRRIGATION DITCH
CONCRETE SIDEWALK
PRESENT TRAVELED ROAD
TRAIL
RAILROAD-TITLE PAGE
RAILROAD-PLAN PAGE
RIGHT OF WAY LINE (P.C. 5+52.1, P.T. 6+73.4)
SURVEY CENTER LINE
RAILROAD CATTLEGUARD
HIGHWAY CATTLEGUARD
BRIDGE
CULVERT
SPILLWAY
HOUSE/BUILDING
CHURCH
CEMETERY
SCHOOL
TOWN-TITLE PAGE
BLUFF OR HILLS
SURFACING PIT
TREE
WINDMILL
SECTION CORNER
BENCH MARK (B.M. 1235)

ON PROFILE

BRIDGE
PIPE CULVERT
BOX CULVERT
VERTICAL CURVE
DATUM LINE GROUND ELEVATION (1137.000)
DATUM LINE GRADE ELEVATION (1137.000)

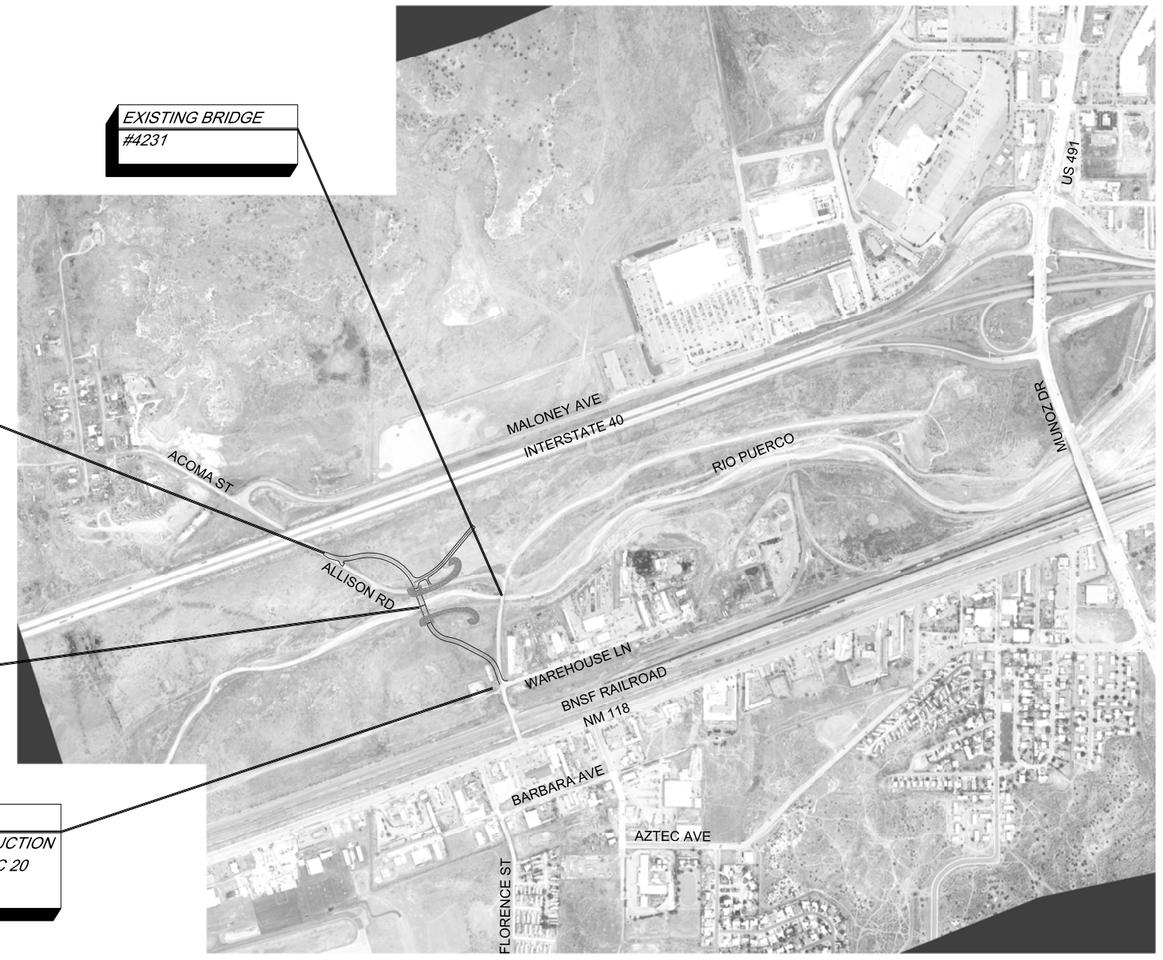

VICINITY MAP

CONTACTS:

PATROL FOREMAN:
CARLOS LONG 505-240-1852
ROY WAGNER 505-240-1840

CONSTRUCTION PROJECT ENGINEER:
MATT SANTISTEVAN, PE 505-281-2864

CITY OF GALLUP
STANLEY HENDERSON, PE 505-863-1290

DESIGNER:
JEANETTE WALTHER, PE (BHI) 505-823-1000

SHIPPING POINTS

GALLUP, NM

THE 2014 EDITION OF NEW MEXICO DEPARTMENT OF TRANSPORTATION STANDARD SPECIFICATIONS FOR HIGHWAY AND BRIDGE CONSTRUCTION SHALL FOR HIGHWAY AND BRIDGE CONSTRUCTION SHALL

LEGEND

THIS CONTRACT
BITUMINOUS SURFACED
GRAVEL SURFACED
GRADED AND DRAINED
UNIMPROVED
PRIMITIVE
CONCRETE SURFACED

INTENT OF PROJECT:
RIO PUERCO BRIDGE REPLACEMENT
(PROPOSED BRIDGE #9718 REPLACES
EXIST BRIDGE #4231)

JEANETTE A. WALTHER
NEW MEXICO
11243
10/5/16
REGISTERED PROFESSIONAL ENGINEER

NO.	DESCRIPTION	DATE	BY
6			
5			
4			
3			
2			
1			

REVISIONS (OR CHANGE NOTICES)

CITY OF GALLUP

VICINITY MAP

THESE PLANS WERE DESIGNED AND/OR ASSEMBLED BY:
JEANETTE WALTHER PHONE: (505) 823-1000

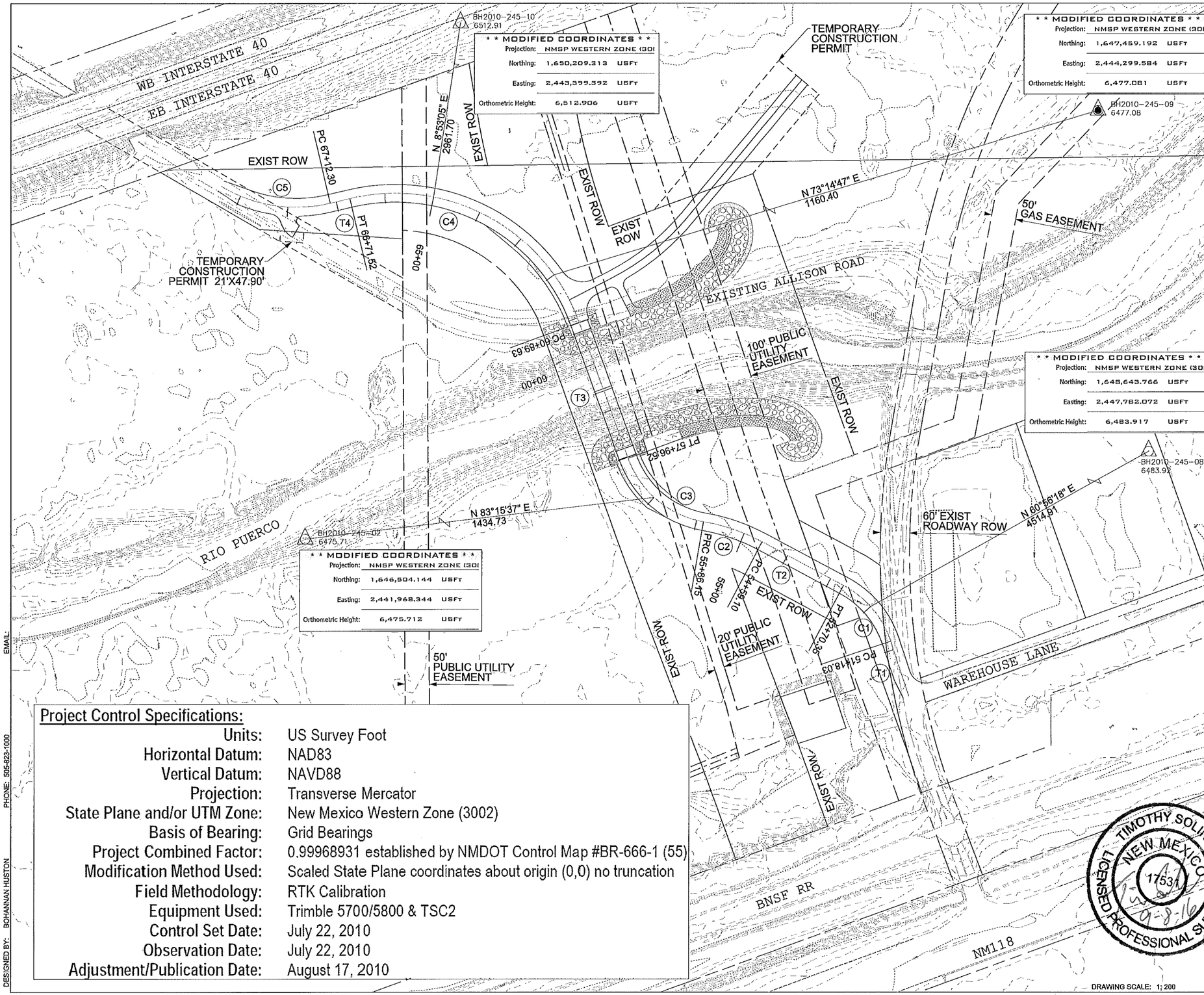

ALLISON ROAD CENTERLINE

TANGENT 1
POT STATION = 50+00.00 N = 1646268.25 E = 2443913.75
PC STATION = 51+18.03 N = 1646380.25 E = 2443876.48
TANGENT LENGTH = 118.03'
TANGENT BEARING = N18°24'11"W

CURVE 1
PI STATION = 51+98.10 N = 1646456.22 E = 2443851.21
PC STATION = 51+18.03 N = 1646380.25 E = 2443876.48
PT STATION = 52+70.35 N = 1646493.76 E = 2443780.49
DELTA = 43°38'09" (LT)
TANGENT LENGTH = 80.07'
RADIUS = 200.00'
CHORD LENGTH = 148.66'
MIDDLE ORDINATE = 14.33'
EXTERNAL = 15.43'
BACK TANGENT = N18°24'11"W
AHEAD TANGENT = N62°02'20"W
CHORD BEARING = N40°13'15"W

TANGENT 2
PT STATION = 52+70.35 N = 1646493.76 E = 2443780.49
PC STATION = 54+59.10 N = 1646582.26 E = 2443613.77
TANGENT LENGTH = 188.75'
TANGENT BEARING = N62°02'20"W

CURVE 2
PI STATION = 55+23.16 N = 1646612.30 E = 2443557.19
PC STATION = 54+59.10 N = 1646582.26 E = 2443613.77
PRC STATION = 55+86.15 N = 1646623.16 E = 2443494.05
DELTA = 18°11'56" (LT)
TANGENT LENGTH = 64.07'
RADIUS = 400.00'
CHORD LENGTH = 126.52'
MIDDLE ORDINATE = 5.03'
EXTERNAL = 5.10'
BACK TANGENT = N62°02'20"W
AHEAD TANGENT = N80°14'16"W
CHORD BEARING = N71°08'18"W

CURVE 3
PI STATION = 57+02.24 N = 1646642.85 E = 2443379.64
PRC STATION = 55+86.15 N = 1646623.16 E = 2443494.05
PT STATION = 57+96.52 N = 1646751.96 E = 2443339.99
DELTA = 60°16'03" (RT)
TANGENT LENGTH = 116.09'
RADIUS = 200.00'
CHORD LENGTH = 200.81'
MIDDLE ORDINATE = 27.03'
EXTERNAL = 31.25'
BACK TANGENT = N80°14'16"W
AHEAD TANGENT = N19°58'13"W
CHORD BEARING = N50°06'14"W

TANGENT 3
PT STATION = 57+96.52 N = 1646751.96 E = 2443339.99
PC STATION = 60+89.63 N = 1647027.45 E = 2443239.88
TANGENT LENGTH = 293.11'
TANGENT BEARING = N19°58'13"W

CURVE 4
PI STATION = 64+45.70 N = 1647362.10 E = 2443118.27
PC STATION = 60+89.63 N = 1647027.45 E = 2443239.88
PT STATION = 66+71.52 N = 1647280.07 E = 2442771.78
DELTA = 83°20'57" (LT)
TANGENT LENGTH = 356.07'
RADIUS = 400.00'
CHORD LENGTH = 531.92'
MIDDLE ORDINATE = 101.23'
EXTERNAL = 135.52'
BACK TANGENT = N19°58'13"W
AHEAD TANGENT = S76°40'50"W
CHORD BEARING = N61°38'41"W

TANGENT 4
PT STATION = 66+71.52 N = 1647280.07 E = 2442771.78
PC STATION = 67+12.30 N = 1647270.68 E = 2442732.10
TANGENTLENGTH = 40.78'
TANGENT BEARING = S76°40'50"W

CURVE 5
PI STATION = 68+34.65 N = 1647242.49 E = 2442613.04
PC STATION = 67+12.30 N = 1647270.68 E = 2442732.10
PT STATION = 69+44.64 N = 1647305.60 E = 2442508.23
DELTA = 44°22'25" (RT)
TANGENT LENGTH = 122.35'
RADIUS = 300.00'
CHORD LENGTH = 226.58'
MIDDLE ORDINATE = 22.21'
EXTERNAL = 23.99'
BACK TANGENT = S76°40'50"W
AHEAD TANGENT = N58°56'45"W
CHORD BEARING = N81°07'57"W

Project Control Specifications:

Units:	US Survey Foot
Horizontal Datum:	NAD83
Vertical Datum:	NAVD88
Projection:	Transverse Mercator
State Plane and/or UTM Zone:	New Mexico Western Zone (3002)
Basis of Bearing:	Grid Bearings
Project Combined Factor:	0.99968931 established by NMDOT Control Map #BR-666-1 (55)
Modification Method Used:	Scaled State Plane coordinates about origin (0,0) no truncation
Field Methodology:	RTK Calibration
Equipment Used:	Trimble 5700/5800 & TSC2
Control Set Date:	July 22, 2010
Observation Date:	July 22, 2010
Adjustment/Publication Date:	August 17, 2010

NO.	DESCRIPTION	DATE	BY
6			
5			
4			
3			
2			
1			

REVISIONS (OR CHANGE NOTICES)

CITY OF GALLUP

SURVEY CONTROL

DRAWING SCALE: 1: 200

DESIGNED BY: BOHANNAN HUSTON PHONE: 505-823-1000 EMAIL:

INDEX OF SHEETS

SHEET NO.	DESCRIPTION		
1-1	COVER SHEET		
1-2	VICINITY MAP		
1-3	SURVEY CONTROL		
1-4	INDEX OF SHEETS		
1-5	SUMMARY OF QUANTITIES		
1-6	GENERAL NOTES		
1-7	ENVIRONMENTAL REQUIREMENTS		
		SHEET SUBTOTAL	7
2-1	EXISTING & PROPOSED TYPICAL SECTIONS		
2-2	SURFACING SCHEDULE AND ESTIMATED STRUCTURE QUANTITIES		
2-3	MISCELLANEOUS QUANTITIES		
2-4	REVEGETATION / EROSION CONTROL PLAN		
2-5	DEMOLITION PLAN		
2-6	PERMANENT EROSION AND SEDIMENT CONTROL QUANTITIES		
2-7	STORM WATER POLLUTION PREVENTION PLAN INFORMATION		
2-8	METAL BARRIER DETAIL		
2-9	CHANNEL GRADING & GUIDEBANKS FOR THE RIO PUERCO		
2-10	GUIDEBANK DETAILS		
2-11	CHANNEL GRADING & GUIDEBANKS FOR THE RIO PUERCO		
		SHEET SUBTOTAL	11
3-1 TO 3-3	PLAN & PROFILE		
4-1	TURNOUT PROFILE		
5-1	BRIDGE GENERAL NOTES, SHEET 1 OF 2		
5-2	BRIDGE GENERAL NOTES, SHEET 2 OF 2		
5-3	ESTIMATED QUANTITIES		
5-4	FOUNDATION NOTES AND SUBSTRUCTURE LAYOUT		
5-5	BORING LOGS		
5-6	BORING LOGS		
5-7	BORING LOGS		
5-8	BORING LOGS		
5-9	BORING LOGS		
5-10	BRIDGE LOCATION PLAN		
5-11	BRIDGE PROFILE		
5-12	TRANSVERSE SECTION		
5-13	LONGITUDINAL SECTION		
5-14	BEARING DETAILS		
5-15	DECK REINFORCING PLAN, SPAN 1		
5-16	DECK REINFORCING PLAN, SPAN 2		
5-17	DECK DETAILS, SHEET 1 OF 2		
5-18	DECK DETAILS, SHEET 2 OF 2		
5-19	TOP OF SLAB ELEVATIONS		
5-20	SEAT ELEVATION DETAILS		
5-21	PRESTRESSED GIRDER DETAILS, SHEET 1 OF 2		
5-22	PRESTRESSED GIRDER DETAILS, SHEET 2 OF 2		
5-23	DIAPHRAGM DETAILS		
5-24	ABUTMENT NO.1 AND NO.2 PLAN AND ELEVATION		
5-25	ABUTMENT DETAILS, SHEET 1 OF 2		
5-26	ABUTMENT DETAILS, SHEET 2 OF 2		
5-27	PIER CAP PLAN AND COLUMN ELEVATION		
5-28	PIER CAP PLAN AND ELEVATION		
5-29	PIER CAP AND COLUMN DETAILS		
5-30	PIER REINFORCING SCHEDULE AND MISCELLANEOUS DETAILS		
5-31	WINGWALL DETAILS		
5-32	APPROACH SLAB DETAILS, SHEET 1 OF 3		
5-33	APPROACH SLAB DETAILS, SHEET 2 OF 3		
5-34	APPROACH SLAB DETAILS, SHEET 3 OF 3		
5-35	REINFORCING SCHEDULES		
		SHEET SUBTOTAL	35
6-1	TRAFFIC CONTROL GENERAL NOTES & SUGGESTED SEQUENCE OF CONSTRUCTION		
6-2	CONSTRUCTION TRAFFIC CONTROL PHASE 1 DETOUR PLAN		
		SHEET SUBTOTAL	2
7-1	PERMANENT SIGNING & STRIPING		
7-2	PERMANENT SIGNING & STRIPING QUANTITY & DETAIL		
		SHEET SUBTOTAL	2
	LIGHTING SHEETS, N/A		
	SIGNALIZATION SHEETS, N/A		
10-1	STRUCTURE SECTION PLAN VIEW		
10-2	STRUCTURE PLACEMENT SHEET		
		SHEET SUBTOTAL	2
11-1	EXISTING UTILITIES		
		SHEET SUBTOTAL	1

SHEET NO.	DESCRIPTION	REV DATE	SERIAL NUMBER
12-1	MAX. AND MIN. COVERS, STEEL ROUND PIPES, CORRUGATED METAL, AND STRUCTURAL PLATE	04/10/12	206-03-1/1
12-2	MAX. & MIN. STEEL ROUND PIPES CORRUGATED METAL AND STRUCTURAL PLATE	04/10/12	206-04-1/3
12-3	MAX & MIN. STEEL ROUND PIPES CORRUGATED METAL AND STRUCTURAL PLATE	04/10/12	206-04-2/3
12-4	PIPE COVER STEEL PIPE ARCHES CORRUGATED METAL AND STRUCTURAL PLATE	04/10/12	206-04-3/3
12-5	PIPE COVER-ALUMINUM ROUND PIPES, CORRUGATED METAL AND STRUCTURAL PLATE	04/10/12	206-05-1/1
12-6	PIPE COVER ALUMINUM PIPE ARCHES, CORRUGATED METAL AND STRUCTURAL PLATE	04/10/12	206-06-1/1
12-7	CORRUGATED METAL CULVERT AND PIPE ARCHES, BEDDING AND BACKFILL DETAILS	08/29/08	206-07-1/1
12-8	FILL HEIGHTS FOR PLASTIC CULVERT PIPE EXCAVATION DETAIL	03/16/11	206-10-1/1
12-9	EXCAVATION AND BACKFILL FOR BRIDGES, WALLS AND CBCS	08/27/08	210-01-1/1
12-10	42" CONCRETE BRIDGE BARRIER RAILING GENERAL DETAILS	04/03/12	514-03-1/6
12-11	42" CONCRETE BRIDGE BARRIER RAILING GENERAL DETAILS	04/03/12	514-03-2/6
12-12	42" CONCRETE BRIDGE BARRIER RAILING STANDARD SECTION AND DETAILS	04/03/12	514-03-3/6
12-13	42" CONCRETE BRIDGE BARRIER RAILING TRANSITION SECTION AND DETAILS	12/27/12	514-03-4/6
12-14	42" CONCRETE BRIDGE BARRIER RAILING DETAILS AT JOINT SEALS	04/03/12	514-03-5/6
12-15	DOWEL ASSEMBLY FOR EXPANSION JOINTS IN 42" CONCRETE WALL BARRIER AND CONCRETE BRIDGE BARRIER RAILING	04/03/12	514-03-6/6
12-16	SYSTEM 1 BRIDGE JOINT STRIP SEAL GENERAL	08/17/12	562-01-1/3
12-17	SYSTEM 1 BRIDGE JOINT STRIP SEAL TYPE "A" INSTALLATION	04/03/12	562-01-2/3
12-18	PREFORMED CLOSED CELL FOAM BRIDGE JOINT SEALS	06/24/13	564-01-1/1
12-19	CULVERT PIPE END SECTIONS (METAL)	11/10/09	570-02-1/2
12-20	CULVERT PIPE END SECTIONS (CONCRETE)	11/10/09	570-02-2/2
12-21	WIRE ENCLOSED RIPRAP, CLASS A	11/16/09	602-01-1/1
12-22	TEMPORARY EROSION AND SEDIMENT CONTROL MEASURES	11/29/04	603-01-1/7
12-23	TEMPORARY EROSION AND SEDIMENT CONTROL MEASURES CHECK DAMS	11/29/04	603-01-2/7
12-24	TEMPORARY EROSION AND SEDIMENT CONTROL MEASURES SILT FENCE	11/29/04	603-01-3/7
12-25	TEMPORARY EROSION AND SEDIMENT CONTROL MEASURES CULVERT AND DROP INLET PROTECTION	11/29/04	603-01-4/7
12-26	T.E.S.C.M. SEDIMENT BASIN, SEDIMENT TRAP, & EARTH DIKE	11/29/04	603-01-5/7
12-27	TEMPORARY EROSION & SEDIMENT CONTROL MEASURES PIPE SLOPE DRAIN & SURFACE ROUGHENING	11/29/04	603-01-6/7
12-28	T.E.S.C.M. OFFSITE TRACKING PREVENTION & DIVERSION DIKE	11/29/04	603-01-7/7
12-29	W-BEAM GUARDRAIL	07/13/16	606-GR31-1/20
12-30	THRIE BEAM GUARDRAIL	07/13/16	606-GR31-2/20
12-31	BEAM GUARDRAIL ELEMENTS	05/06/14	606-GR31-3/20
12-32	BEAM GUARDRAIL POSTS AND BLOCKS	05/06/14	606-GR31-4/20
12-33	W-BEAM GUARDRAIL POST DETAILS IN ROCK FORMATION	07/13/16	606-GR31-5/20
12-34	W-BEAM GUARDRAIL POST DETAILS IN PAVEMENT	07/13/16	606-GR31-5A/20
12-35	TYPICAL INSTALLATION AND SURFACING DETAILS	05/06/14	606-GR31-6/20
12-36	END TREATMENT TL-3 END TERMINAL	07/13/16	606-GR31-7/20
12-37	END TREATMENT TL-2 END TERMINAL	07/13/16	606-GR31-8/20
12-38	END TREATMENT W-BEAM END ANCHOR & THRIE BEAM END ANCHOR	07/13/16	606-GR31-9/20
12-39	END TREATMENT DRIVEWAY END ANCHOR	05/06/14	606-GR31-10/20
12-40	END TREATMENT W-BEAM END ANCHOR DETAILS	05/06/14	606-GR31-11/20
12-41	END TREATMENT THRIE BEAM END ANCHCOR DETAILS	05/06/14	606-GR31-12/20
12-42	END TREATMENT DRIVEWAY END ANCHOR DETAILS	05/06/14	606-GR31-13/20
12-43	CURVED GUARDRAIL DETAILS	05/06/14	606-GR31-14/20
12-44	MEDIAN PROTECTION SYSTEM	05/06/14	606-GR31-15/20
12-45	DRAINAGE STRUCTURE PROTECTION SYSTEM	05/06/14	606-GR31-16/20
12-46	TRANSITION METAL BARRIER TO RIGID BARRIER	05/06/14	606-GR31-17/20
12-47	EXISTING BEAM GUARDRAIL TO 31" BEAM GUARDRAIL TRANSITION	05/06/14	606-GR31-18/20
12-48	THRIE BEAM GUARDRAIL END SECTIONS	05/06/14	606-GR31-19/20
12-49	W-BEAM GUARDRAIL END SECTIONS	05/06/14	606-GR31-20/20
12-50	SMALL SIGN SUPPORT INSTALLATION DETAILS	01/11/05	701-02-1/3
12-51	SMALL SIGN SUPPORT INSTALLATION DETAILS	02/03/05	701-02-2/3
12-52	MULTI-DIRECTIONAL SLIP BASE POST DETAILS	01/11/05	701-02-3/3
12-53	ALUMINUM SIGN PANEL DETAILS	01/11/05	701-03-1/2
12-54	ALUMINUM SIGN PANEL DETAILS	01/11/05	701-03-2/2
12-55	TEMPORARY TRAFFIC CONTROL GENERAL NOTES	12/10/15	702-01-1/5
12-56	TEMPORARY TRAFFIC CONTROL GENERAL NOTES	12/10/15	702-01-2/5
12-57	CONSTRUCTION & MAINTENANCE SIGN FACE DETAILS	12/10/15	702-01-3/5
12-58	CHANNELIZATION DEVICES & PORTABLE SIGN SUPPORTS FOR CONSTRUCTION, MAINTENANCE, UTILITY, & INCIDENT MANAGEMENT OPERATIONS	11/03/15	702-01-4/5
12-59	TEMPORARY TRAFFIC MARKINGS FOR CONSTRUCTION	11/03/15	702-01-5/5
12-60	BOP/EOP SIGNING (2 LANE)	07/15/05	702-03-1/1
12-61	ROAD OBJECT MARKER DETAILS	03/14/05	703-01-1/3
12-62	ROAD DELINEATOR - GUIDE DETAILS	1/11/05	703-01-2/3
12-63	DELINEATORS & OBJECT MARKERS	1/11/05	703-01-3/3
	SHEET SUBTOTAL	63	
13-1 TO 13-14	CROSS SECTIONS		
	SHEET SUBTOTAL	14	
	SHEET TOTAL	137	

JEANETTE A. WALTHER
NEW MEXICO
11243
10/5/16
REGISTERED PROFESSIONAL ENGINEER

NO.	DESCRIPTION	DATE	BY
6			
5			
4			
3			
2			
1			

REVISIONS (OR CHANGE NOTICES)

CITY OF GALLUP

INDEX OF SHEETS

DESIGNED BY: BOHANNAN HUSTON
PHONE: 505-823-1000
EMAIL:

SUMMARY OF QUANTITIES

ITEM SPECIFICATIONS			ROADWAY		CONSTRUCTION SIGNING		PERMANENT SIGNING		CONSTRUCTION ENGINEERING		RIO PUERCO BRIDGE		PROJECT TOTAL	
NUMBER	DESCRIPTION	UNIT	ESTIMATE	FINAL	ESTIMATE	FINAL	ESTIMATE	FINAL	ESTIMATE	FINAL	ESTIMATE	FINAL	ESTIMATE	FINAL
201000	CLEARING AND GRUBBING	LS	LS										LS	
203000	UNCLASSIFIED EXCAVATION	CU YD	38860										38860	
203100	BORROW	CU YD	49800										49800	
206000	UNSUITABLE MATERIAL EXCAVATION	CU YD	50										50	
207000	SUBGRADE PREPARATION	SQ YD	16570										16570	
210000	EXCAVATION AND BACKFILL FOR MAJOR STRUCTURES	CU YD									5354		5354	
213000	OBLITERATING OLD ROAD	MILE	0.23										0.23	
303000	BASE COURSE	TON	3030										3030	
408100	PRIME COAT MATERIAL	TON	15										15	
416000	MINOR PAVEMENT	SQ YD	7250										7250	
501100	PILE SPLICES	EACH									4		4	
501101	PILE CUTOFF	LIN FT									176		176	
501124	DRIVEN PILES (24" PIPE)	LIN FT									3520		3520	
504301	PILE DYNAMIC TEST CONSULTANT TESTING	EACH									6		6	
504401	CASE PILE WAVE ANALYSIS TEST CONSULTANT TESTING	EACH									12		12	
511300	SUBSTRUCTURE CONCRETE CLASS A	CU YD									220		220	
511601	WIND BREAK	LS									LS		LS	
511602	FOGGING SYSTEM	LS									LS		LS	
512003	HIGH PERFORMANCE CONCRETE (HPD)	CU YD									471		471	
514042	CONCRETE BARRIER RAILINGS 42"	LIN FT									654		654	
518074	PRESTRESSED CONCRETE MEMBER TYPE 72-MODIFIED	LIN FT									1504		1504	
535000	CRACK SEALING	SQ YD									1264		1264	
536001	EPOXY URETHANE POLYMER CONCRETE BRIDGE DECK OVERLAY	SQ YD									1264		1264	
540060	REINFORCING BARS GRADE 60	LBS									58391		58391	
540160	EPOXY COATED REINFORCING BARS GRADE 60	LBS									132386		132386	
541000	STRUCTURAL STEEL FOR CONCRETE BRIDGES	LBS									16870		16870	
547000	SAFETY AND ENVIRONMENTAL REQUIREMENTS	LS									LS		LS	
562000	BRIDGE JOINT STRIP SEAL	LIN FT									28		28	
564000	PREFORMED CLOSED CELL FOAM BRIDGE JOINT SEALS	LIN FT									95		95	
570030	30" CULVERT PIPE	LIN FT	178										178	
570031	30" CULVERT PIPE END SECTION	EACH	4										4	
601000	REMOVAL OF STRUCTURES & OBSTRUCTIONS	LS	LS								LS		LS	
601110	REMOVAL OF SURFACING	SQ YD	1400										1400	
602000	RIPRAP CLASS A	CU YD	2940										2940	
602010	RIPRAP CLASS B	CU YD	100										100	
603100	TEMPORARY SOIL STABILANT	AC	0.0										0.0	
603260	CULVERT PROTECTION	SQ YD	20										20	
603281	SWPPP PLAN PREPARATION AND MAINTENANCE	LS							LS				LS	
604001	GEOTEXTILE CLASS 1	SQ YD	1220										1220	
606001	SINGLE FACE W-BEAM GUARDRAIL	LIN FT	162.5										162.5	
606052	END TREATMENT TL-2 END TERMINAL	EACH	2										2	
606053	END TREATMENT W-BEAM END ANCHOR	EACH	1										1	
606055	END TREATMENT DRIVEWAY END ANCHOR	EACH	1										1	
606062	TRANSITION METAL BARRIER TO RIGID BARRIER	EACH	4										4	
618000	TRAFFIC CONTROL MANAGEMENT	LS							LS				LS	
621000	MOBILIZATION	LS	LS										LS	
622002	FIELD LABORATORY, TYPE II	EACH							1				1	
632000	CLASS A SEEDING	AC	2.3										2.3	
632020	CLASS C SEEDING	AC	3.2										3.2	
701000	PANEL SIGNS	SQ FT					80						80	
701100	STEEL POST & BASE POST FOR ALUMINUM PANEL SIGNS	LIN FT					150						150	
702000	CONSTRUCTION SIGNING	SQ FT			230								230	
702100	STEEL POSTS AND BASE POSTS FOR CONSTRUCTION SIGNING	LIN FT			465								465	
702238	BARRICADE, TYPE III-8'	EACH			5								5	
702610	PORTABLE CHANGEABLE MESSAGE SIGN	EACH			3								3	
703003	OBJECT MARKER TYPE 3	EACH					2						2	
703100	ROAD DELINEATOR TYPE GUIDE	EACH					23						23	
704700	HOT THERMOPLASTIC PAVEMENT MARKING 4"	LIN FT					12400						12400	
704701	HOT THERMOPLASTIC PAVEMENT MARKING 6"	LIN FT					200						200	
709040	RIGID ELECTRICAL CONDUIT 4" (DIA)	LIN FT	80										80	
801000	CONSTRUCTION STAKING BY THE CONTRACTOR	LS							LS				LS	
802000	POST CONSTRUCTION PLANS	LS							LS				LS	

DESIGNED BY: BOHANNAN HUSTON
PHONE: 505-823-1000
EMAIL:

JEANETTE A. WALTHER
NEW MEXICO
11245
10/7/16
REGISTERED PROFESSIONAL ENGINEER

NO.	DESCRIPTION	DATE	BY
6			
5			
4			
3			
2			
1			

REVISIONS (OR CHANGE NOTICES)

CITY OF GALLUP

SUMMARY OF QUANTITIES

DRAWING SCALE: 1:

GENERAL NOTES

1. SALVAGEABLE MATERIALS:

   SALVAGEABLE MATERIALS FROM THIS PROJECT ARE TO BE HAULED AND STOCKPILED AT THE CITY OF GALLUP YARD ON WAREHOUSE LANE. SALVAGEABLE ITEMS INCLUDE TEMPORARY CONCRETE WALL BARRIER ADJACENT TO THE EXISTING RIO PUERCO BRIDGE. HAUL OF SUCH MATERIAL SHALL BE PERFORMED DURING NORMAL WORKING HOURS AS DIRECTED BY THE PROJECT ENGINEER. PAYMENT FOR THIS WORK BE INCLUDED IN THE CONTRACT PRICE FOR ITEM 601000 – "REMOVAL OF STRUCTURES AND OBSTRUCTION."

2. REMOVALS:

   THE CONTRACTOR SHALL BE RESPONSIBLE FOR ALL REMOVALS REQUIRED TO COMPLETE THE PROJECT. ADDITIONAL REMOVALS NOT SHOWN ON THE PLANS WILL BE DESIGNATED BY THE PROJECT ENGINEER. THIS WORK WILL BE CONSIDERED AS INCLUDED IN THE CONTRACT PRICE FOR ITEM 601000 – "REMOVAL OF STRUCTURES AND OBSTRUCTIONS" AND THE CONTRACTOR WILL NOT RECEIVE ADDITIONAL COMPENSATION FOR UNLISTED REMOVALS.

3. PROVIDING INGRESS AND EGRESS:

   THE CONTRACTOR SHALL PROVIDE INGRESS AND EGRESS TO LOCAL RESIDENTS AND BUSINESSES FOR THE DURATION OF THE PROJECT. THE CONTRACTOR SHALL ADVISE OF ANY SCHEDULED ACCESS CLOSURES, AT LEAST 24 HOURS IN ADVANCE, WITH PROPERTY OWNERS AND THE PROJECT ENGINEER.

4. CONSTRUCTION EQUIPMENT AND MATERIAL STORAGE:

   THE CONTRACTOR SHALL NOT STORE EQUIPMENT OR MATERIAL WITHIN 15' FEET FROM THE EDGE OF THE DRIVING LANE OF ALLISON ROAD AND 14' FEET FROM EDGE OF OTHER ROADWAYS UNLESS THE EQUIPMENT OR MATERIAL IS PROPERLY SHIELDED UTILIZING CURRENT SAFETY DESIGN AND INSTALLATION METHODS. THE SAFETY DESIGN FOR SHIELDING SHALL BE PROVIDED BY THE CONTRACTOR AND MUST BE APPROVED BY THE PROJECT MANAGER BEFORE IMPLEMENTING. THIS WORK, INCLUDING DESIGN, INSTALLATION AND REMOVAL OF THE SHIELDING SHALL BE CONSIDERED INCIDENTAL TO THE COMPLETION OF THE PROJECT AND NO SEPARATE MEASUREMENT OR PAYMENT WILL BE MADE THEREFOR.

5. PROTECTION OF SURVEY MONUMENTS:

   THE CONTRACTOR SHALL TAKE PRECAUTIONS TO PROTECT HORIZONTAL AND VERTICAL CONTROL SURVEY MONUMENTS (BENCHMARKS) FROM DAMAGE PRIOR TO INITIATING CONSTRUCTION. IF DURING THE COURSE OF CONSTRUCTION OPERATIONS, THE CONTRACTOR DISTURBS OR DESTROYS A BENCHMARK, THE STANDARDS AND PROCEDURES SET FOR IN THE "GEODETIC MARK PRESERVATION GUIDEBOOK", NATIONAL GEODETIC SURVEY, MARCH 1990, CONTACT NGS MARK PRESERVATION CENTER – NOAA, TELEPHONE (505) 768–3606.

6. PAVEMENT DROP OFF GUIDELINE:

   IF A PAYMENT DROP OFF IS CREATED DURING CONSTRUCTION, THE CONTRACTOR SHALL INITIATE PROTECTIVE ACTION IN ACCORDANCE WITH THE DEPARTMENTS CURRENT "DROP OFF GUIDELINE". THIS WORK SHALL BE CONSIDERED INCIDENTAL TO THE COMPLETION OF THE PROJECT AND NO SEPARATE MEASUREMENT OR PAYMENT WILL BE MADE THEREFOR.

7. "R" VALUE:

   THE DESIGN "R" VALUE FOR THIS PROJECT IS 30. MATERIAL WITH AN "R" VALUE LESS THAN THE DESIGN "R" SHALL NOT BE PLACED IN OR BE ALLOWED TO REMAIN WITHIN THE TOP 2' OF THE FINISHED SUBGRADE. THIS SHALL INCLUDE DETOUR SUBGRADE.

8. LIMITATIONS ON COMPACTION EQUIPMENT:

   THE CONTRACTOR SHALL BE RESTRICTED TO USE OF A 35 TON (MAX) NON –VIBRATORY ROLLER FOR THE COMPACTION OF AREAS WHERE THE USE OF HEAVIER EQUIPMENT COULD DAMAGE UNDERGROUND UTILITIES OR OTHER PERMANENT STRUCTURES AS REQUIRED AND APPROVED BY THE PROJECT MANAGER.

9. THE CONTRACTOR IS HEREBY NOTIFIED AND MUST BE AWARE OF THE POSSIBLE PRESENCE OF ABANDONED VEHICLE RELATED SOLID WASTE IN THE PROJECT AREA IN THE VICINITY OF THE PROPOSED NEW RIO PUERCO BRIDGE ON THE NORTH EMBANKMENT. IF PETROLEUM PRODUCTS OR OTHER POTENTIAL CONTAMINATION IS ENCOUNTERED DURING THE REMOVAL OF THE SOLID WASTE, THE CONTRACTOR MUST NOTIFY THE NEW MEXICO ENVIRONMENT DEPARTMENT: SOLID WASTE BUREAU (505–827–0197 OR 505–222–9529) AND REMOVE THE WASTE UNDER THE DIRECTION OF A QUALIFIED AND EXPERIENCED WASTE REMOVAL CONTRACTOR. THE ACTIVITIES DESCRIBED ABOVE SALL BE PAID FOR BY BID ITEM NO. 60100 REMOVAL OF STRUCTURES AND OBSTRUCTIONS.

10. WARPING OF SLOPES:
    THE CONTRACTOR SHALL WARP SLOPES TO 1.5:1 MAX WHERE NECESSARY TO STAY WITHIN THE RIGHT OR CONSTRUCTION EASEMENT LIMITS, SUBJECT TO THE APPROVAL OF THE PROJECT MANAGER. THIS WORK SHALL BE CONSIDERED INCIDENTAL TO ITEM NO. 203000, UNCLASSIFIED EXCAVATION AND NO SEPERATE MEASUREMENT OR PAYMENT SHALL BE MADE THERFOR

GENERAL NOTES CONT'D

11. MATERIAL PITS AND AGGREGATE RESTRICTIONS:
    AGGREGATE PRODUCED FROM A TODILTO LIMESTONE FORMATION IS PROHIBITED FOR USE IN HMA, OR ANY MIX THAT INCORPORATES ASPHALT MATERIALS

12. CONTRACTOR COORDINATION WITH UTILITIES:
    THE CONTRACTOR IS HEREBY ADVISED THAT UTILITY WORK BY THE UTILITY OWNERS MAY HAVE TO BE PERFORMED CONCURRENT WITH CONSTRUCTION. THE CONTRACTOR SHALL PROVIDE FOR UTILITY WORK IN CONJUNCTION WITH CONSTRUCTION OPERATIONS AND SHALL BE REQUIRED TO COORDINATE SCHEDULE OF WORK WITH RESPECTIVE UTILITY OWNERS WITH IN AND/OR IMMEDIATELY ADJACENT TO THE CONTRACT BOUNDARY. ANY CLAIMS FOR DELAYS SHALL BE CONTROLLED BY THE TERM AND CONDITIONS OF SECTIONS 105.6–COOPERATION WITH UTILITIES, AND 107.20 CONTRACTOR?S RESPONSIBILITY AND 107.21 CONTRACTOR?S RESPONSIBILITY FOR UTILITY PROPERTY AND SERVICES OF THE 2014 NEW MEXICO DEPARTMENT OF TRANSPORTATION STANDARD SPECIFICATIONS FOR HIGHWAY AND BRIDGE CONSTRUCTION. REFER TO SHEET 11–1 FOR UTILITY CONTACT INFORMATION. THIS WORK SHALL BE CONSIDERED INCIDENTAL TO CONSTRUCTION AND NO SEPARATE MEASUREMENT OR PAYMENT WILL BE MADE THEREFOR.

13. EARTHWORK:
    EARTHWORK QUANTITIES WILL BE MEASURED IN PLACE. UNCLASSIFIED EXCAVATION AND BORROW QUANTITIES SHALL BE BASED ON THE FINAL COMPACTED IN PLACE VOLUME, THEREFOR NO SHRINKAGE QUANTITY WILL BE USED.

14. TRAFFIC CONTROL PLAN:
    THE TRAFFIC CONTROL PLAN INCORPORATED WITHIN THIS PLAN SET IDENTIFIES SUGGESTED SEQUENCE OF CONSTRUCTION, PHASING, TRAFFIC CONTROL ITEM PLACEMENT, AND QUANTITIES. CONTRACTOR SHALL NOTIFY, THROUGH THE PROJECT MANAGER AND THE DISTRICT 6 TRAFFIC ENGINEER OF THE FOLLOWING:

    A. THE CONTRACTOR ACCEPTS FOR ITS OWN AND INTENDS TO FULLY UTILIZE THE PROVIDED TRAFFIC CONTROL PLAN, PHASING, TRAFFIC CONTROL ITEM PLACEMENT, AND QUANTITIES. IN SUCH CASE THE CONTRACTOR SHALL SUBMIT THROUGH THE PROJECT MANAGER, TO THE DISTRICT 6 TRAFFIC ENGINEER A TRAFFIC CONTROL PLAN ACCEPTANCE LETTER STAMPED BY A LICENSED PROFESSIONAL ENGINEER REGISTERED IN NEW MEXICO STATING THE INTENT TO UTILIZE AND BE FULLY LIABLE FOR THE PROVIDED TRAFFIC CONTROL PLAN INCLUDING PHASING, TRAFFIC CONTROL ITEM PLACEMENT, AND QUANTITIES.

    B. IF THE CONTRACTOR PREFERS TO MODIFY THE SEQUENCE, PHASING, AND/OR TRAFFIC CONTROL PLAN THE CONTRACTOR SHALL SUBMIT AN ALTERNATE TRAFFIC CONTROL PLAN (TCP) TO THE DISTRICT 6 PROJECT ENGINEER FOR REVIEW AND APPROVAL. THE PLAN SHALL BE SUBMITTED AT LEAST TEN (10) WORKING DAYS PRIOR TO THE PRECONSTRUCTION CONFERENCE AND/OR BEFORE THE REQUESTED CHANGES SHALL TAKE PLACE. THE PLAN SHALL BE SUBMITTED ON 11? X 17? SHEETS. NO HAND DRAFTED TRAFFIC CONTROL PLANS WILL BE ACCEPTED.THE CONTRACTORS PROPOSED, ALTERNATE PLAN SHALL BE REVIEWED, APPROVED, AND SEALED/STAMPED BY A NEW MEXICO REGISTERED PROFESSIONAL ENGINEER BEFORE IT IS SUBMITTED TO THE NMDOT. NO PROJECT CONSTRUCTION ACTIVITIES SHALL BEGIN UNTIL APPROVAL OF THE TCP HAS BEEN RECEIVED BY THE CONTRACTOR. THE NMDOT DISTRICT 6 SECTION RESERVES THE RIGHT TO MAKE CHANGES TO THE CONTRACTOR?S TRAFFIC CONTROL PLAN TO ADDRESS SITE SPECIFIC ITEMS THAT WERE NOT SHOWN ON THE PLANS. THE NMDOT ALSO RESERVES THE RIGHT TO ADD DEVICES AND/OR SIGNS TO THE APPROVED PLAN IF IT IS DETERMINED BY THE TRAFFIC ENGINEER THAT THE SIGNS AND/OR DEVICES WOULD BE REQUIRED TO ADDRESS SAFETY CONCERNS WITHIN OR IN ADVANCE OF WORK ZONE. ANY CHANGES TO THE PLANS WHICH RESULTS IN ADDITIONAL SIGNS AND/OR DEVICES WILL BE CONSIDERED INCIDENTAL TO ITEM 618000, TRAFFIC CONTROL MANAGEMENT

15. PUBLIC NOTIFICATION OF LANE CLOSURES:
    THROUGHOUT THE LIFE OF THIS PROJECT THE CONTRACTOR SHALL, WITH PRIOR APPROVAL BY THE PROJECT MANAGER, BE RESPONSIBLE TO KEEP THE DISTRICT 6 PUBLIC RELATIONS CONTACT, CITY OF GALLUP AND LOCAL NEWS MEDIA INFORMED OF ANY LANE CLOSURES THAT WILL RESTRICT THE NORMAL FLOW OF TRAFFIC ALONG WITH ALL INFORMATION REGARDING CONSTRUCTION ACTIVITIES THAT WILL AFFECT TRAFFIC. DISTRICT PUBLIC RELATIONS CONTACT INFORMATION IS AS FOLLOWS: NMDOT DISTRICT 6, C.O.G. STAN HENDERSON (505) 863–1290, EMAIL shenderson@gallupnm.gov. DELANE BAROS 505–285–2244, E–MAIL–delane.baros@state.nm.us. PUBLIC NOTIFICATION OF LANE CLOSURES FOR THE WORK DESCRIBED ABOVE WILL BE CONSIDERED INCIDENTAL TO ITEM 618000, TRAFFIC CONTROL MANAGEMENT.

JEANETTE A. WALTHER
NEW MEXICO
11243
10/5/16
REGISTERED PROFESSIONAL ENGINEER

NO.	DESCRIPTION	DATE	BY
6			
5			
4			
3			
2			
1			

REVISIONS (OR CHANGE NOTICES)

CITY OF GALLUP

GENERAL NOTES

DRAWING SCALE: 1:

DESIGNED BY: BOHANNAN HUSTON PHONE: 505-823-1000 EMAIL:

ENVIRONMENTAL COMMITMENTS

THE CONTRACTOR SHALL REFER TO SECTION 107 OF THE STANDARD SPECIFICATION, MAKING SPECIAL NOTE OF SUB-SECTION 107.14: CONTRACTORS RESPONSIBILITIES FOR ENVIRONMENTAL AND CULTURAL RESOURCE APPROVAL.

☐ NO ADDITIONAL PROJECT-SPECIFIC ENVIRONMENTAL REQUIREMENTS APPLY.

☒ IN ADDITION TO SECTION 107, THE FOLLOWING PROJECT-SPECIFIC ENVIRONMENTAL REQUIREMENTS APPLY:

MIGRATORY BIRD TREATY ACT COMPLIANCE: THE CONTRACTOR SHALL CONTACT THE PROJECT MANAGER BEFORE FEBRUARY 15 TO REQUEST A MIGRATORY BIRD NEST SURVEY. FAILURE BY THE CONTRACTOR TO TIMELY REQUEST THE MIGRATORY BIRD SURVEY MAY IMPACT THE CONTRACTORS CONSTRUCTION SCHEDULE AND NO ADDITIONAL TIME OR COMPENSATION WILL BE GRANTED. THE CONTRACTOR SHALL COMPLY WITH THE MIGRATORY BIRD TREATY ACT (MBTA) AT ALL TIMES. FOLLOWING RECEIPT OF NOTICE TO PROCEED (NTP), THE CONTRACTOR SHALL BE RESPONSIBLE FOR MAINTAINING NEST FREE CONDITIONS. THE CONTRACTOR'S PERSONNEL SHALL KEEP DETAILED LOGS OF NEST INSPECTIONS AND REMOVALS. SOME BIRD SPECIES ARE CAPABLE OF BUILDING A NEST IN AS LITTLE AS FIVE (5) DAYS. AS AN ALTERNATIVE TO ON-GOING NEST MONITORING AND REMOVAL, THE CONTRACTOR MAY PROPOSE TO PREVENT MIGRATORY BIRDS FROM NESTING BY IMPLEMENTING TECHNIQUES SUCH AS NETTING FOLLOWING UNOCCUPIED NEST REMOVAL. IF THE CONTRACTOR'S NEST EXCLUSION MEASURES HAVE FAILED AND OCCUPIED NESTS ARE PRESENT, THE NEST MUST BE AVOIDED UNTIL THE JUVENILE BIRDS HAVE FLEDGED (FLOWN FROM THE NEST). ONCE A NEST IS OCCUPIED (CONTAINING EGGS AND/OR YOUNG), IT CANNOT BE REMOVED WITHOUT A UNITED STATES FISH AND WILDLIFE SERVICE (USFWS) PERMIT. IF NEST AVOIDANCE IS NOT FEASIBLE AND RELOCATION MUST OCCUR, NEST DISTURBANCE ACTIVITIES SHALL BE SUSPENDED AT THE CONTRACTOR'S EXPENSE WHILE THE PROCESS FOR NEST RELOCATION OR REMOVAL IS COORDINATED BETWEEN THE NMDOT AND THE USFWS. IF THE USFWS DENIES THE RELOCATION OR REMOVAL PERMIT REQUEST, THE PROJECT SUSPENSION SHALL CONTINUE UNTIL AFTER THE MIGRATORY BIRD NESTING SEASON ENDS, OR AFTER ALL YOUNG HAVE LEFT THE NEST AS DETERMINED BY THE PROJECT MANAGER, THROUGH CONSULTATION WITH THE ENVIRONMENTAL BUREAU.

CLASS B NOXIOUS WEEDS, HALOGETON, OCCUR IN THE PROJECT AREA. CLASS B WEED SPECIES SHOULD BE TREATED PRIOR TO CONSTRUCTION AND WEED MANAGEMENT MEASURES IMPLEMENTED ACCORDING TO NMDOT SPECIFICATIONS.

R Blake Royalty

MANAGER, NMDOT ENVIRONMENTAL BUREAU

DESIGNED BY: BOHANNAN HUSTON PHONE: 505-823-1000 EMAIL:

NO.	DESCRIPTION	DATE	BY
6			
5			
4			
3			
2			
1			

REVISIONS (OR CHANGE NOTICES)

CITY OF GALLUP

ENVIRONMENTAL REQUIREMENTS

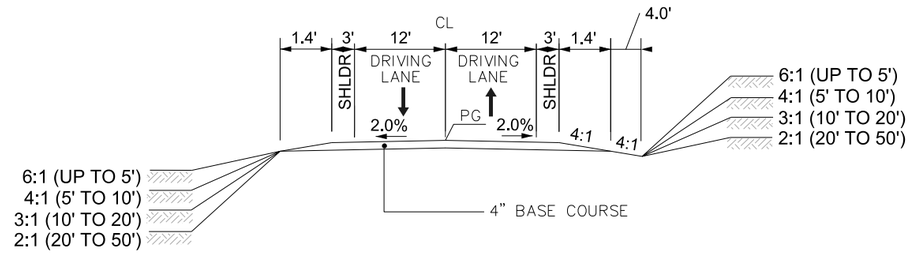

TURNOUT STA 61+40 RT

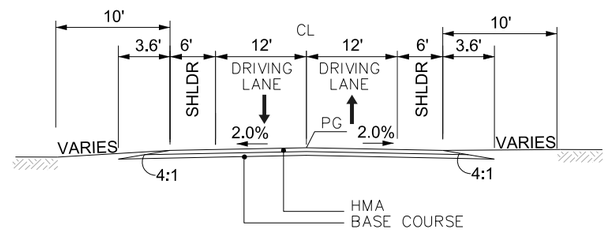

ALLISON RD

STA 67+00 TO STA 69+44.64

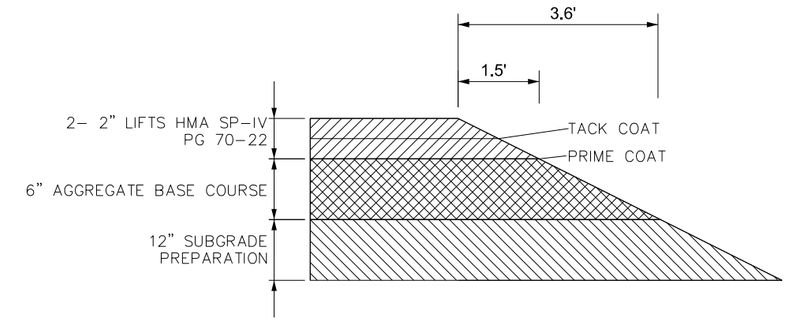

PAVEMENT SECTION & SURFACE TAPER DETAIL

NTS

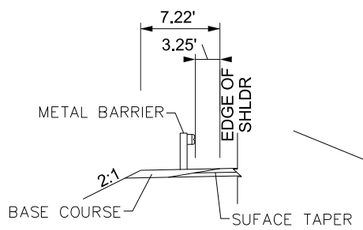

METAL BARRIER DETAIL

NTS

STA 56+45.66, 18.00' LT TO 56+96.44, 25.22' LT TRANSITION PAVEMENT WIDTH. METAL BARRIER STA 56+96.44 TO STA 57+98.32 LT (REFER TO METAL BARRIER DETAILS THIS SECTION)

METAL BARRIER STA 60+90.29 TO 60+00.53 LT (REFER TO METAL BARRIER DETAILS THIS SECTION). STA 63+00.00, 25.22' LT TO STA 63+77.89, 18.00' LT TRANSITION PAVEMENT WIDTH

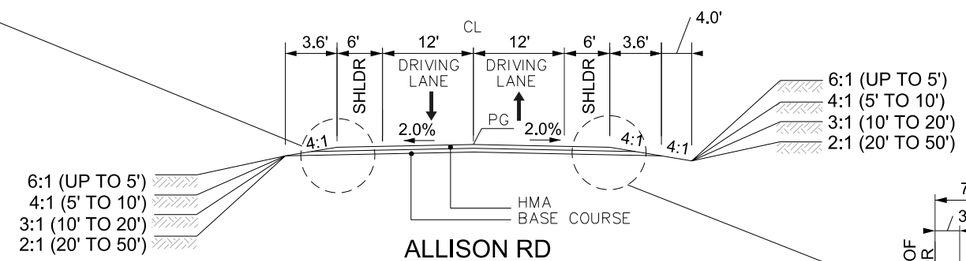

ALLISON RD

STA 50+00 TO STA 57+98.32
STA 57+98.32 TO STA STA 60+90.32 RIO PUERCO BRIDGE
STA 60+90.32 TO STA 69+44.64

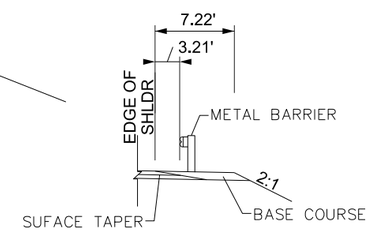

METAL BARRIER DETAIL

NTS

TRANSITION PAVEMENT WIDTH STA 56+32.45, 18.00' RT TO STA 56+89.46, 25.22' RT. METAL BARRIER STA 57+00.65 TO STA 57+98.32 RT CONNECT TO BRIDGE BARRIER (REFER TO METAL BARRIER DETAILS THIS SECTION).

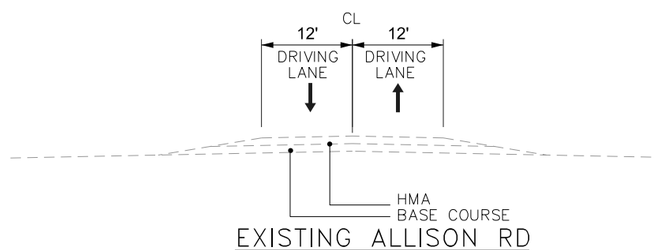

EXISTING ALLISON RD

DESIGN SPEED 25 MPH

LENGTH OF PROJECT

STATION	TO	STATION	LENGTH FT	LENGTH MILES	LOCATION
50+00.00		69+44.64	1944.64	0.37	ALLISON ROAD RIO PUERCO BRIDGE REPLACEMENT
		TOTAL	1944.64	0.37	

NO.	DESCRIPTION	DATE	BY
6			
5			
4			
3			
2			
1			

REVISIONS (OR CHANGE NOTICES)

CITY OF GALLUP

EXISTING AND PROPOSED TYPICAL SECTIONS

DRAWING SCALE: 1:

DESIGNED BY: BOHANNAN HUSTON
PHONE: 505-823-1000
EMAIL:

SURFACING SCHEDULE

						207000 SUBGRADE PREPARATION		303000 BASE COURSE				416000 MINOR PAVEMENT			*** 70-22 BIT MAT	*** HYDR LIME	* ASPHALT MATERIAL FOR TACK COAT		408100 PRIME COAT MATERIAL	
LOC	DESCRIPTION	STATION	TO	STATION	FT	WIDTH	SQ YD	WIDTH	DEPTH	SQ YD	TONS	WIDTH	DEPTH	SQ YD	TONS	TONS	WIDTH	TONS	WIDTH	TONS
LT & RT	2- 12' DRIVING LANES & 2- 6' SHOULDERS	50+00.00	"	57+98.32	798.32	43.24	3835.48	41.08	0.50	3643.89	1184.26	37.44	0.33	3321.01	38.96	10.82	37.44	1.11	38.9	6.47
LT & RT	RIO PUERCO BRIDGE	57+98.32	"	60+90.32	292.00															
LT & RT	2- 12' DRIVING LANES & 2- 6' SHOULDERS	60+90.32	"	69+44.64	854.32	43.24	4104.53	41.08	0.50	3899.50	1267.34	37.44	0.33	3553.97	41.69	11.58	37.44	1.18	38.9	6.92
RT	WARE HOUSE LANE					CALC	120.44	CALC	0.50	120.44	39.14	CALC	0.33	120.44	1.41	0.39	CALC	0.04	CALC	0.23
LT	TO STA 67+60 LT					CALC	163.33	CALC	0.50	163.33	53.08	CALC	0.33	163.33	1.92	0.53	CALC	0.05	CALC	0.31
RT	TO STA 61+40 RT	100+63.46	"	106+60.00	596.54	32.88	2179.36	31.44	0.33	2083.91	451.51									
RT	TO STA 61+40 RT FILLETS					CALC	91.00	CALC	0.50	91.00	29.58	CALC	0.33	91.00	1.07	0.30	CALC	0.03	CALC	0.17
	TOTALS		"				10494.15				3024.92			7249.76	85.05	23.63		2.42		14.10
	USE		"				10500				3030			7250				3		15

* INCIDENTAL TO NMDOT BID ITEM NO. 416000

*** FOR CONTRACTOR INFORMATION ONLY

ESTIMATED SURFACING FACTORS

ITEM	BITUMINOUS MATERIAL PG 70-22	SPEC 407	SUPP 408	GALLONS	UNIT WT	HYDRATED LIME	PAC -20
		GAL/SQ YD	GAL/SQ YD	PER TON	TONS/CY		
Base Course					1.950		
Plant Mix Bituminous Pavement SP-IV	5.400%				1.975	1.500%	
Asphalt for Tack Coat		0.080		240.000			
Asphalt for Prime Coat			0.450	240.000			

ESTIMATED STRUCTURE QUANTITIES

			203000 UNCLASSIFIED EXCAVATION			511000	541200	570030	570031
			INLET	OUTLET	TOTAL	STRUCTURAL CONCRETE, CLASS A	STRUCT STEEL FOR MISCELLANEOUS STRUCTURES	30" CULVERT PIPE	30" CULVERT PIPE END SECTION
STATION	STRUCTURE	SKEW	CY	CY	CY	CY	LB	LF	EACH
	SOUTH GUIDE BANK DRAINAGE STRUCTURE							82	2
	NORTH GUIDE BANK DRAINAGE STRUCTURE							96	2
	TOTAL							178	4
	USE							178	4

DESIGNED BY: BOHANNAN HUSTON PHONE: 505-823-1000 EMAIL:

JEANETTE A. WALTHER NEW MEXICO 11243 REGISTERED PROFESSIONAL ENGINEER 10/5/16

NO.	DESCRIPTION	DATE	BY
6			
5			
4			
3			
2			
1			

REVISIONS (OR CHANGE NOTICES)

CITY OF GALLUP

SURFACING SCHEDULE AND ESTIMATED STRUCTURE QUANTITIES

P: 20100245\Priority 1\Roadway Design\Documentation\Spreadsheets\C7G801ESQ.xlsx
P: 20100245\Priority 1\Roadway Design\Documentation\Spreadsheets\C7G801SS.xlsx

213000 - OBLITERATING OF OLD ROAD

STATION	LOC	TO	STATION	LOC	LENGTH FT	LENGTH MILE	REMARKS
51+56.00			53+44.00	RT	490.00	0.09	EXIST ALLISON RD, WAREHOUSE NORTH TO EXIST RIO PUERCO BRIDGE
58+20.00			50+30.00	RT	405	0.08	EXIST RIO PUERCO BRIDGE NORTH TO NORTH GUIDEBANK
61+00.00			65+00.00	LT	280	0.05	NORTH GUIDEBANK TO EXIST DRIVEWAY
					TOTAL	**0.22**	
					USE	**0.23**	

REFER TO OBLITERATION PLAN FOR DETAILS

LUMP SUM

ITEM	DESCRIPTION
201000	CLEARING AND GRUBBING
601000	REMOVAL OF STRUCTURES AND OBSTRUCTIONS
603281	SWPPP PLAN PREPARATION AND MAINTENANCE
618000	TRAFFIC CONTROL MANAGEMENT
621000	MOBILIZATION
801000	CONSTRUCTION STAKING BY THE CONTRACTOR
802000	POST CONSTRUCTION PLANS

622002 FIELD LABORATORY, TYPE II

622002	FIELD LABORATORY, TYPE II	EACH	1

601000 - REMOVAL OF STRUCTURES & OBSTRUCTIONS

STATION	TO	STATION	LOC	QUANTITY	REMARKS
				1 EA	EXISTING ALLISON BRIDGE OVER THE RIO PUERCO
			LT & RT	138'	METAL BARRIER AT EXISTING ALLISON BRIDGE OVER THE RIO PUERCO
			LT & RT	290'	TEMP CWB AT EXISTING ALLISON BRIDGE OVER THE RIO PUERCO
			LT & RT	38'	WOOD BARRIER AT EXISTING ALLISON BRIDGE OVER THE RIO PUERCO
			LT & RT	16 EA	EXISTING SIGNS ALONG EXISTING ALIGNMENT ALLISON ROAD
				44'	36" CMP NORTH OF WAREHOUSE LANE ON EXISTING ALIGNMENT ALLISON ROAD
53+00.00		56+40.00	LT	330'	EXIST FENCE
				1 EA	CAR PARTS IN EXISTING EMABANKMENT AS NEEDED FOR PROJECT GRADING

601110 - REMOVAL OF SURFACING

STATION	TO	STATION	LENGTH FT	AVG WIDTH FT	SY	REMARKS
50+00.00		51+56.00	161	28	500.89	EXIST ALLISON AT WAREHOUSE LANE
67+81.00		69+44.64	288	28	896.00	DRIVEWAY REALIGNMENT TO EOP
				TOTAL	**1396.89**	
				USE	**1400**	

709040- RIGID ELECTRICAL CONDUIT- 4"

STATION	TO	STATION	LOC	LENGTH FT	REMARKS
60+89.50		61+00.00	LT & RT	78.00	INSTALL WITH PULL WIRE FOR PHONE LINE RELOCATION
			TOTAL	78.00	
			USE	80	

METAL BARRIER INSTALLATION SCHEDULE

STATION	TO	STATION	LOC	606001 SINGLE FACE W-BEAM GUARDRAIL LIN FT	606052 END TREATMENT TL-2 END TERMINAL EACH	606053 END TREATMENT W BEAM END ANCHOR EACH	606055 END TREATMENT DRIVEWAY END ANCHOR EACH	606062 TRANSITION METAL BARRIER TO RIGID BARRIER EACH	REMARKS
56+96.44	"	57+98.32	LT	50.00		1		1	BRIDGE BARRIER DEPARTURE
57+00.65	"	57+98.32	RT		1.00			1	BRIDGE BARRIER APPROACH
60+90.29	"	63+00.53	LT	112.50	1.00			1	BRIDGE BARRIER APPROACH
60+90.29	"	61+25.24	RT				1	1	BRIDGE BARRIER DEPARTURE, STEEP SLOPE
	"								
			TOTAL	**162.50**	**2.00**	**1**	**1**	**4**	
			USE	**162.50**	**2**	**1**	**1**	**4**	

EARTHWORK SUMMARY

STATION	TO	STATION	LOC	203000 UNCLASSIFIED EXCAVATION CU YD	203000 *UNCLASSIFIED EXCAVATION CU YD	EMBANKMENT CU YD	203100 BORROW CU YD	206000 UNSUITABLE MATERIAL EXCAVATION CU YD	EXCESS	REMARKS
50+00.00		57+98.32	LT & RT	284	12350	18276	17992	23		ALLISON EXCLUDE BRIDGE STRUCTURE
60+90.32		69+44.64	LT & RT	673	11335	20235	19562	19		ALLISON EXCLUDE BRIDGE STRUCTURE
100+18.00		106+60.54	LT & RT	319	7210	12522	12203			TURN OUT STA 61+40 RT
			TOTALS	**1276**	**30895**	**51033**	**49757**	**42**		
			USE	**1300**	**30900**		**49800**	**50**		

NOTES:
1. NO SEPARATE PAYMENT WILL BE MADE FOR DOUBLE HANDELING OF EXCESS MATERIAL USED AS EMBANKMENT
2. EMBANKMENT AND BORROW SHALL BE MEASURED AND PAID FOR BY THE FINAL COMPACTION IN PLACE VOLUME, THEREFORE NO SHRINKAGE QUANTITY SHALL BE MEASURED OR PAID FOR.
* SUBEXCAVATE AND RECOMPACT 5' OF EXISTING GROUND PER GEOTECHNICAL RECOMMENDATIONS

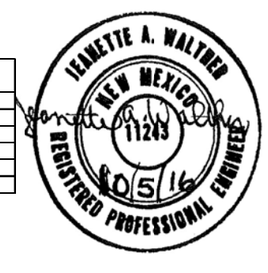

NO.	DESCRIPTION	DATE	BY
6			
5			
4			
3			
2			
1			

REVISIONS (OR CHANGE NOTICES)

CITY OF GALLUP

MISCELLANEOUS QUANTITIES

DESIGNED BY: BOHANNAN HUSTON PHONE: 505-823-1000 EMAIL:

P: 20100245\Priority 1\Roadway Design\Documentation\Spreadsheets\C7G801MQ.xlsx

DRAWING SCALE: 1:

jwalther 10/5/2016 7:57:31 PM Design File: P:\20100245\Priority 1\PLANS\C7G801Priority1_MQ01.dgn

DESIGNED BY: NEW MEXICO PROJECT NO.

SEEDING

STATION	TO	STATION	LOC	632000 CLASS A SEEDING (FLATTER 4:1) AC	632020 CLASS C SEEDING AC	603100 TEMPORARY SOIL STABILANT AC	REMARKS
50+00.00		58+47.00	RT	0.27		0.32	ALLLISON RD
58+47.00		57+98.32	RT		0.24	0.29	ALLLISON RD
56+32.00		57+98.32	RT	0.10		0.12	ALLLISON RD
60+90.32		61+27.00	RT	0.05		0.05	ALLLISON RD
61+52.00		63+66.00	RT	0.14		0.17	ALLLISON RD
63+66.00		66+55.00	RT		0.24	0.28	ALLLISON RD
66+55.00		70+49.00	RT	0.14		0.17	ALLLISON RD
50+00.00		54+56.00	LT	0.21		0.25	ALLLISON RD
54+56.00		56+70.00	LT		0.21	0.25	ALLLISON RD
56+70.00		57+98.32	LT		0.12	0.14	ALLLISON RD
60+90.32		63+55.00	LT		0.20	0.24	ALLLISON RD
63+55.00		65+19.00	LT		0.14	0.17	ALLLISON RD
65+19.00		67+85.00	LT	0.16		0.20	ALLLISON RD
68+14.00		70+49.00	LT	0.03		0.03	ALLLISON RD
100+71.00		102+35.00	RT		0.17	0.20	TO STA 61+40 RT
102+35.00		106+60.00	RT	0.21		0.25	TO STA 61+40 RT
100+92.00		102+61.00	LT		0.40	0.48	TO STA 61+40 RT
102+61.00		106+60.00	LT	0.19		0.23	TO STA 61+40 RT
			RT	0.30		0.36	OLBLITERATED EXISTING ALLISON RD SOUTH OF THE RIO PUERCO
			RT	0.32		0.39	OLBLITERATED EXISTING ALLISON RD NORTH OF THE RIO PUERCO
			LT	0.18		0.21	OLBLITERATED EXISTING ALLISON RD LT OF THE NEW ALIGNMENT
		TOTAL		**2.29**	**1.70**	**4.80**	
		USE		**2.3**	**1.8**	**4.8**	

STATIONS APPROXIMATE. ALL DISTURBED AREAS ARE TO BE SEEDED

DESIGNED BY: BOHANNAN HUSTON PHONE: 505-823-1000 EMAIL:

JEANETTE A. WALTHER NEW MEXICO 11243 REGISTERED PROFESSIONAL ENGINEER 10/5/16

NO.	DESCRIPTION	DATE	BY
6			
5			
4			
3			
2			
1			

REVISIONS (OR CHANGE NOTICES)

CITY OF GALLUP

REVEGETATION/
EROSION CONTROL PLAN

P: 20100245\Priority 1\Roadway Design\Documentation\Spreadsheets\C7G801MQ.xlsx

DRAWING SCALE: 1:

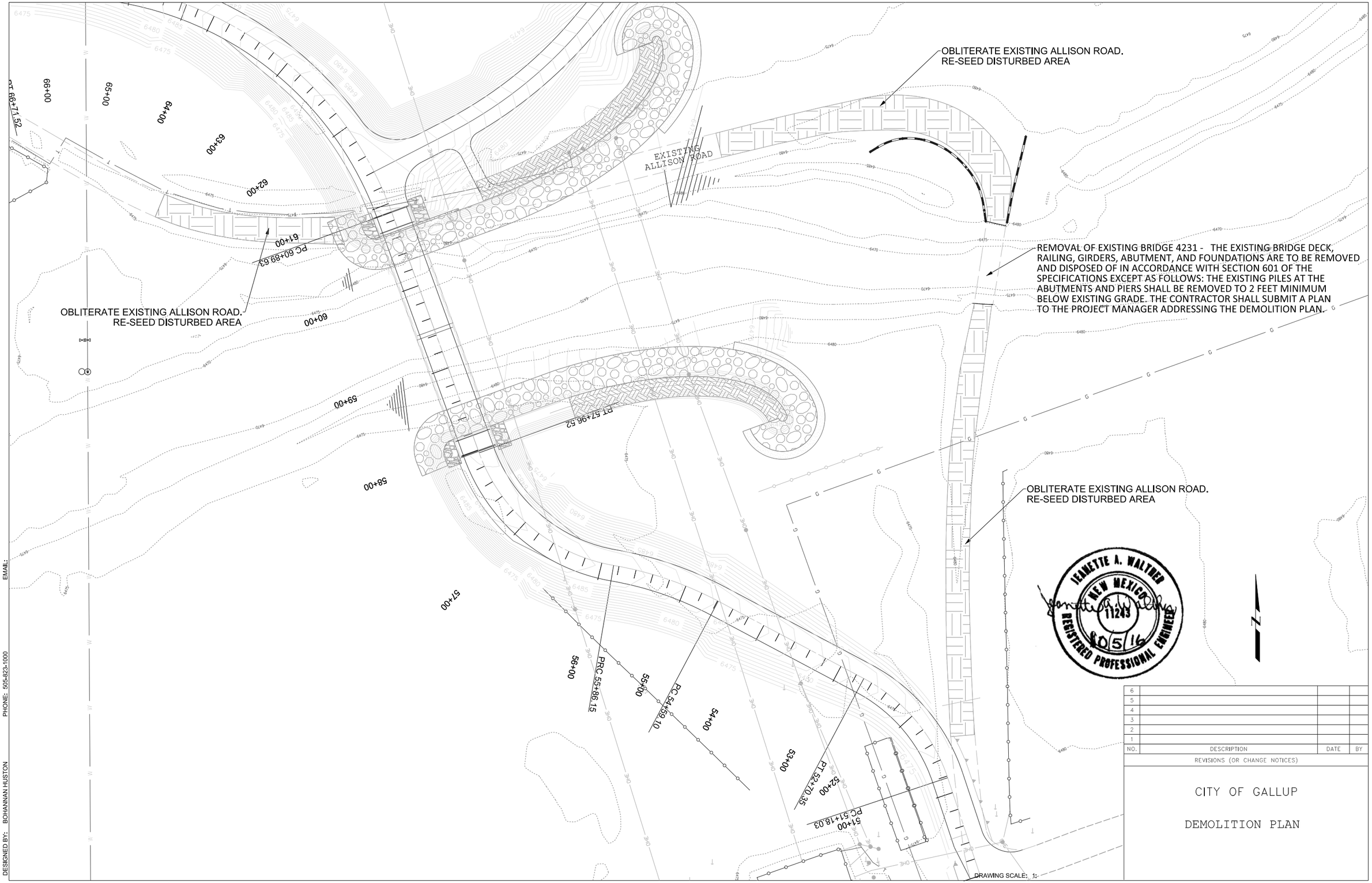

NO.	DESCRIPTION	DATE	BY
6			
5			
4			
3			
2			
1			

REVISIONS (OR CHANGE NOTICES)

CITY OF GALLUP

DEMOLITION PLAN

DESIGNED BY: BOHANNAN HUSTON PHONE: 505-823-1000 EMAIL:

DRAWING SCALE: 1:

PERMANENT EROSION & SEDIMENT CONTROL MEASURES

STATION	TO	STATION	LOC	DESCRIPTION	603260 CULVERT PROTECTION SY
				SOUTH GUIDE BANK DRAINAGE STRUCTURE AT OUTLET	8.33
				SOUTH GUIDE BANK DRAINAGE STRUCTURE AT OUTLET	8.33
TOTALS					**16.66**
USE					**20**

DESIGNED BY: BOHANNAN HUSTON PHONE: 505-823-1000 EMAIL:

JEANETTE A. WALTHER
NEW MEXICO
11243
10/5/16
REGISTERED PROFESSIONAL ENGINEER

NO.	DESCRIPTION	DATE	BY
6			
5			
4			
3			
2			
1			

REVISIONS (OR CHANGE NOTICES)

CITY OF GALLUP

PERMANENT EROSION & SEDIMENT CONTROL QUANTITIES

P: 20100245\Priority 1\Roadway Design\Documentation\Spreadsheets\C7G801TPQ.xlsx

DRAWING SCALE: 1:

STORM WATER POLLUTION PREVENTION PLAN INFORMATION

NOI INPUTS

NMDOT PROJECTS REQUIRE ELECTRONIC NOI SUBMISSION- PAPER SUBMISSION REQUIRES PRIOR APPROVAL.	
PERMIT NUMBER: NMR120000 STATE OF NEW MEXICO, EXCEPT INDIAN COUNTRY NMR120001 INDIAN COUNTRY WITHIN THE STATE OF NEW MEXICO, EXCEPT NAVAJO RESERVATION LANDS THAT ARE COVERED UNDER ARIZONA PERMIT AZ100001 AND UTE MOUNTAIN RESERVATION LANDS THAT ARE COVERED UNDER COLORADO PERMIT COR100001.	
OPERATOR INFORMATION: CITY OF GALLUP	
IRS EMPLOYER IDENTIFICATION NUMBER (EIN):	
POINT OF CONTACT: CITY OF GALLUP PROJECT MANAGER	
NOI PREPARED BY: CITY OF GALLUP	
PROJECT / SITE NAME: ALLISON ROAD, RIO PUERCO BRIDGE REPLACEMENT, CN C6150942	
PROJECT / SITE ADDRESS: ALLISON ROAD (WAREHOUSE TO I-40 UNDERPASS)	
LATITUDE:	35°31"17"N
LONGITUDE:	108°46"26"W
FEDERAL OPERATOR:	NO
ESTIMATED PROJECT START DATE:	11/2016
ESTIMATED PROJECT COMPLETION DATE:	11/2017
ESTIMATED AREA TO BE DISTURBED (NEAREST 1/4 ACRE):	4.75 ACRE
COMMENCED EARTH-DISTURBING ACTIVITIES?:	NO
PREVIOUS NPDES PERMIT? IF YES, PERMIT NO:	NO
MUNICIPAL SEPARATE STORM SEWER SYSTEM (MS4):	NO
SURFACE WATERS WITHIN 50 FT? YES\NO	YES
RECEIVING WATER:	RIO PUERCO
IMPAIRED WATERS	YES. LISTED POLLUTANTS: NUTRIENTS. TMDL'S: FECAL COLIFORM, TOTAL NITROGEN & TOTAL PHOSPHORUS.
IMPAIRED WATERS METHOD: ONLINE CONSULTATION OF NEW MEXICO ENVIRONMENT DEPARTMENT LISTING OF STATEWIDE 303D AND TMDL IMPAIRMENTS.	
TIER 2, TIER 2.5, TIER 3 WATERS - CONSULT 2012 CGP APPENDIX "F"	
CHEMICAL TREATMENT INFORMATION - THIS PROJECT WILL NOT UTILIZE THESE CHEMICALS.	
SWPPP CONTACT INFORMATION - CITY OF GALLUP PROJECT MANAGER	
ENDANGERED SPECIES CRITERIA (A, B, C, D, E, or F): A	
HISTORIC PRESERVATION - ALL CONTROLS (TESCP SHEETS) REQUIRE SUBSURFACE DISTURBANCE ARCHEOLOGICAL SURVEY FOR PROJECT WILL INDICATE EXISTANCE OF HISTORIC PROPERTIES. IF HISTORIC PROPERTIES EXIST, TESCP SHEETS CAN SHOW NO EFFECT ON HISTORIC PROPERTIES	
CERTIFICATION: NOI MUST BE CERTIFIED BY "A PRINCIPAL EXECUTIVE OFFICER OR RANKING ELECTED OFFICIAL".	

THIS PROJECT HAS NO BARE GROUND POST CONSTRUCTION. ALL AREAS HAVE EITHER IMPERVIOUS SURFACE OF PERMANENT EROSION PROTECTION. FINAL STABILIZATION TEMPORARY EROSION AND SEDIMENT CONTROL PLAN (FINAL STABILIZATION TESCP) SHEETS ARE NOT NEEDED AND THEREFORE NOT INCLUDED IN THIS PLAN SET.

GENERAL NOTES:

1. THE 2012 EDITION OF NMDOT NATIONAL POLLUTANT DISCHARGE ELIMINATION SYSTEM (NPDES) MANUAL AND SECTION 603 - TEMPORARY EROSION AND SEDIMENT CONTROL OF THE 2014 NEW MEXICO DEPARTMENT OF TRANSPORTATION STANDARD SPECIFICATIONS FOR HIGHWAY AND BRIDGE CONSTRUCTION - SHALL BE USED AS MINIMUM REQUIREMENTS TO DEVELOP OR MODIFY THE STORM WATER POLLUTION PREVENTION PLAN (SWPPP).
2. THE NPDES PERMIT NUMBER FOR THE PROJECT OR A COPY OF THE NOTICE OF INTENT (NOI), IF A PERMIT NUMBER HAS NOT YET BEEN ASSIGNED, SHALL BE POSTED AT THE PROJECT SITE OR THE FIELD OFFICE AT ALL TIMES DURING CONSTRUCTION.
3. THE STORM WATER POLLUTION PREVENTION PLAN (SWPPP) AND ALL MAINTENANCE AND INSPECTION REPORTS SHALL BE SIGNED BY A QUALIFIED INSPECTOR ASSIGNED BY CONTRACTOR. THE SWPPP AND THE INSPECTION REPORTS SHALL BE AVAILABLE TO EPA REPRESENTATIVE AT ALL TIMES DURING CONSTRUCTION.
4. INFORMATION NEEDED TO COMPLETE THE NOTICE OF INTENT (NOI) IS PROVIDED IN THIS PLAN.
5. THE CONTRACTOR SHALL SPECIFICALLY DEFINE ALL REQUIRED CONTROL MEASURES FOR EACH CONSTRUCTION PHASE, AND SHALL COMPLY WITH THE PROVISIONS OF THE NPDES MANUAL AND THE 2012 CONSTRUCTION GENERAL PERMIT.
6. FINAL SEEDING AND REVEGETATION PLAN SERVES AS THE FINAL SOIL STABILIZATION MANAGEMENT PRACTICE IN ADDITION TO THE MEASURES SHOWN ON THE PROJECT TESCP. NO OTHER MEASURES ARE REQUIRED FOR THIS PROJECT POST CONSTRUCTION SITE CONDITION.

NO.	DESCRIPTION	DATE	BY
6			
5			
4			
3			
2			
1			

REVISIONS (OR CHANGE NOTICES)

CITY OF GALLUP

STORM WATER POLLUTION PREVENTION PLAN (SWPPP) INFORMATION

DESIGNED BY: BOHANNAN HUSTON PHONE: 505-823-1000 EMAIL:

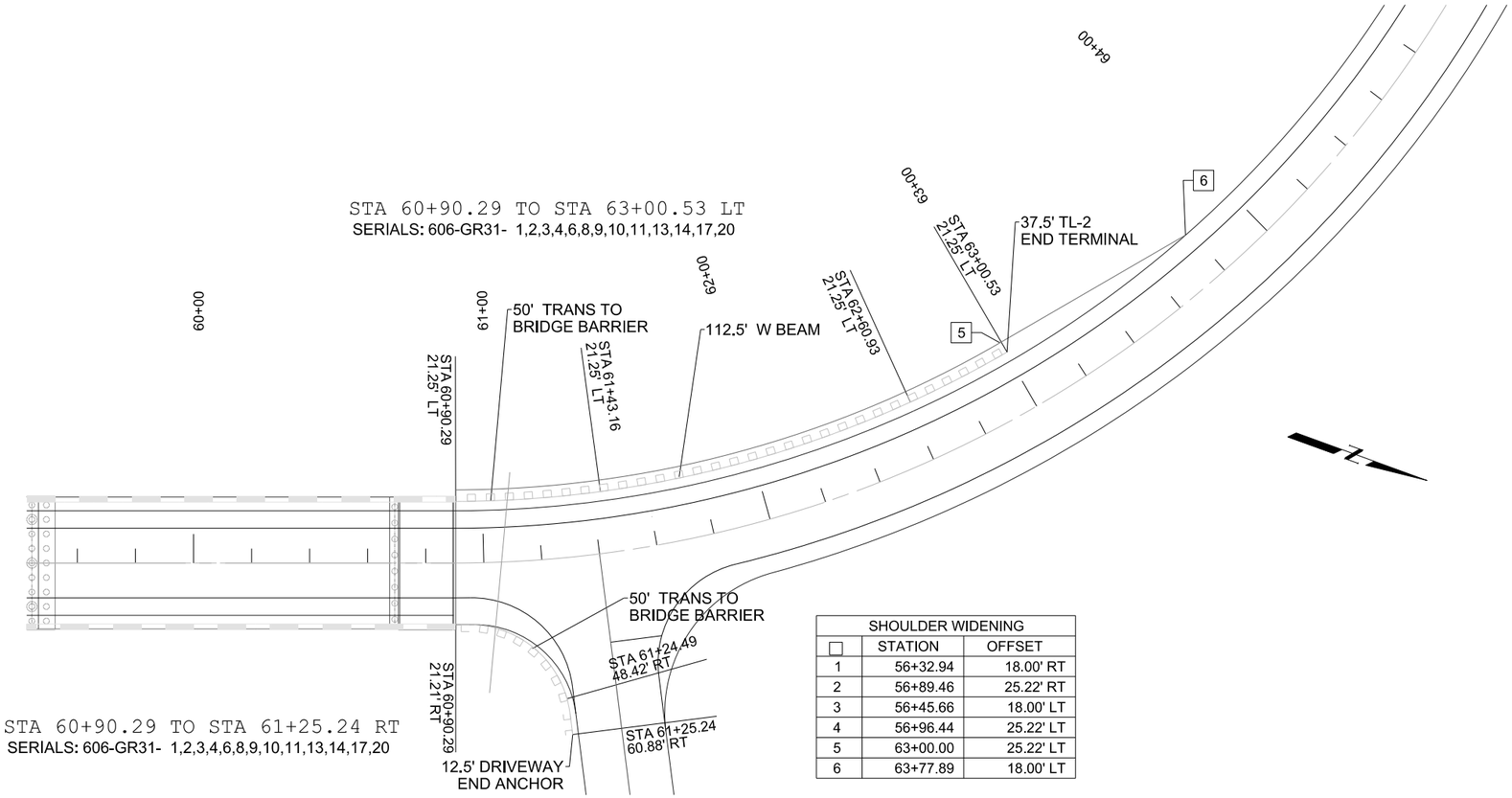

SHOULDER WIDENING		
☐	STATION	OFFSET
1	56+32.94	18.00' RT
2	56+89.46	25.22' RT
3	56+45.66	18.00' LT
4	56+96.44	25.22' LT
5	63+00.00	25.22' LT
6	63+77.89	18.00' LT

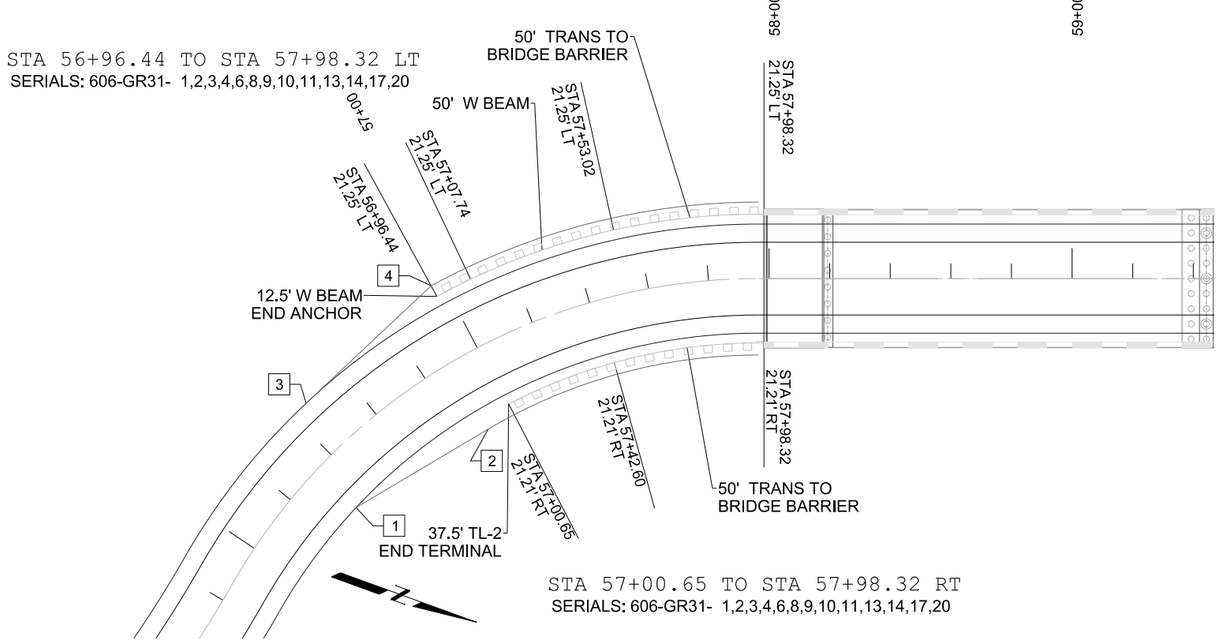

NOTE: SERIALS LISTED APPLY DIRECTLY TO INSTALLATION. OTHER SHEETS ARE INCLUDED FOR REFERANCE.

50 0 50 100

SCALE IN FEET

NO.	DESCRIPTION	DATE	BY
6			
5			
4			
3			
2			
1			

REVISIONS (OR CHANGE NOTICES)

CITY OF GALLUP

METAL BARRIER DETAIL SHEET

DRAWING SCALE: 1:

DESIGNED BY: BOHANNAN HUSTON
PHONE: 505-823-1000
EMAIL:

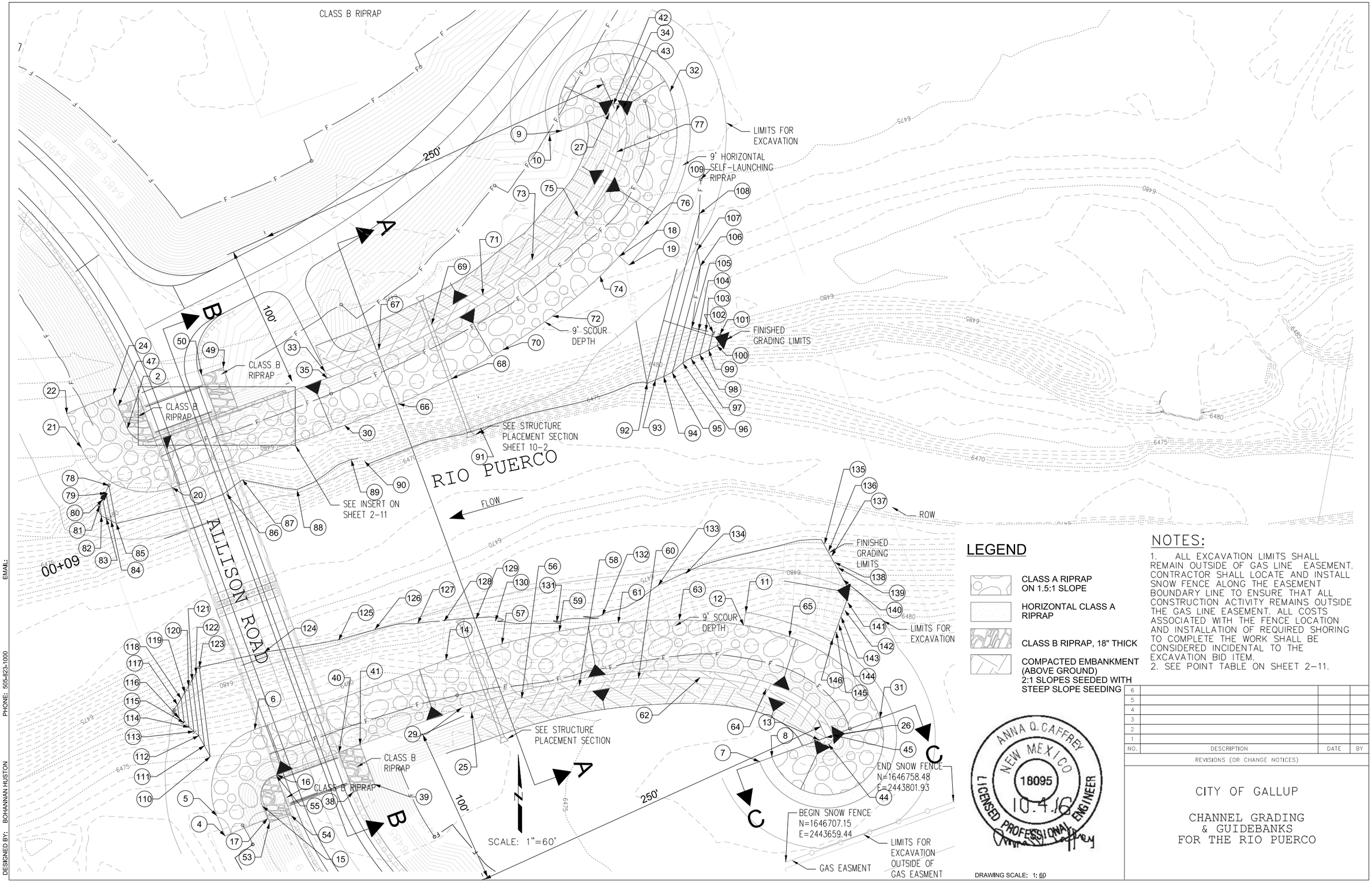

LEGEND

- CLASS A RIPRAP ON 1.5:1 SLOPE
- HORIZONTAL CLASS A RIPRAP
- CLASS B RIPRAP, 18" THICK
- COMPACTED EMBANKMENT (ABOVE GROUND) 2:1 SLOPES SEEDED WITH STEEP SLOPE SEEDING

NOTES:

1. ALL EXCAVATION LIMITS SHALL REMAIN OUTSIDE OF GAS LINE EASEMENT. CONTRACTOR SHALL LOCATE AND INSTALL SNOW FENCE ALONG THE EASEMENT BOUNDARY LINE TO ENSURE THAT ALL CONSTRUCTION ACTIVITY REMAINS OUTSIDE THE GAS LINE EASEMENT. ALL COSTS ASSOCIATED WITH THE FENCE LOCATION AND INSTALLATION OF REQUIRED SHORING TO COMPLETE THE WORK SHALL BE CONSIDERED INCIDENTAL TO THE EXCAVATION BID ITEM.
2. SEE POINT TABLE ON SHEET 2-11.

ANNA Q. CAFFREY
NEW MEXICO
18095
10.4.16
LICENSED PROFESSIONAL ENGINEER

NO.	DESCRIPTION	DATE	BY
6			
5			
4			
3			
2			
1			

REVISIONS (OR CHANGE NOTICES)

CITY OF GALLUP

CHANNEL GRADING & GUIDEBANKS FOR THE RIO PUERCO

DRAWING SCALE: 1: 60

DESIGNED BY: BOHANNAN HUSTON
PHONE: 505-823-1000
EMAIL:

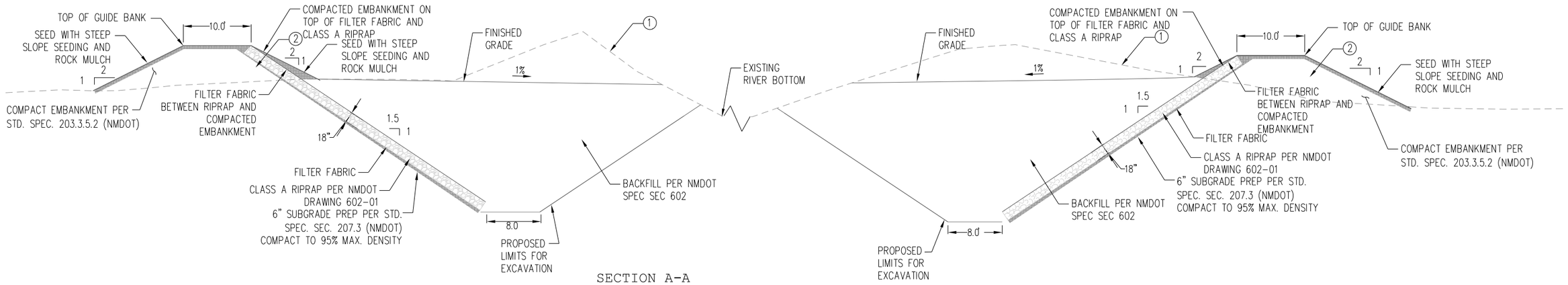

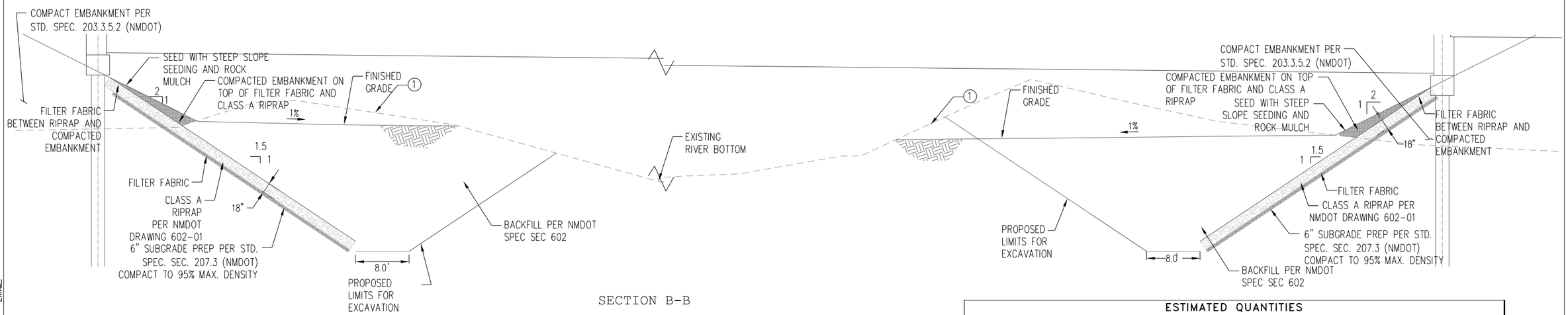

ESTIMATED QUANTITIES				
	ITEM		UNIT	TOTAL	USE
1	203000	EXCAVATION, BORROW, AND EMBANKMENT (EXCAVATE/HAUL TO WASTE)	CU.YD.	2036	2040
2	203000	EXCAVATION, BORROW, AND EMBANKMENT (CONSTRUCT/COMPACT GUIDE	CU.YD.	3468	3470
	207000	SUBGRADE PREPARATION	SQ.YD.	6062	6070
	602000	RIPRAP CLASS A	CU.YD.	2936	2940
	602010	RIPRAP CLASS B	CU.YD.	95	100
	604001	GEOTEXTILE CLASS 1	SQ.YD.	1215	1220
	632020	CLASS C SEEDING	ACRE	1.4	1.4

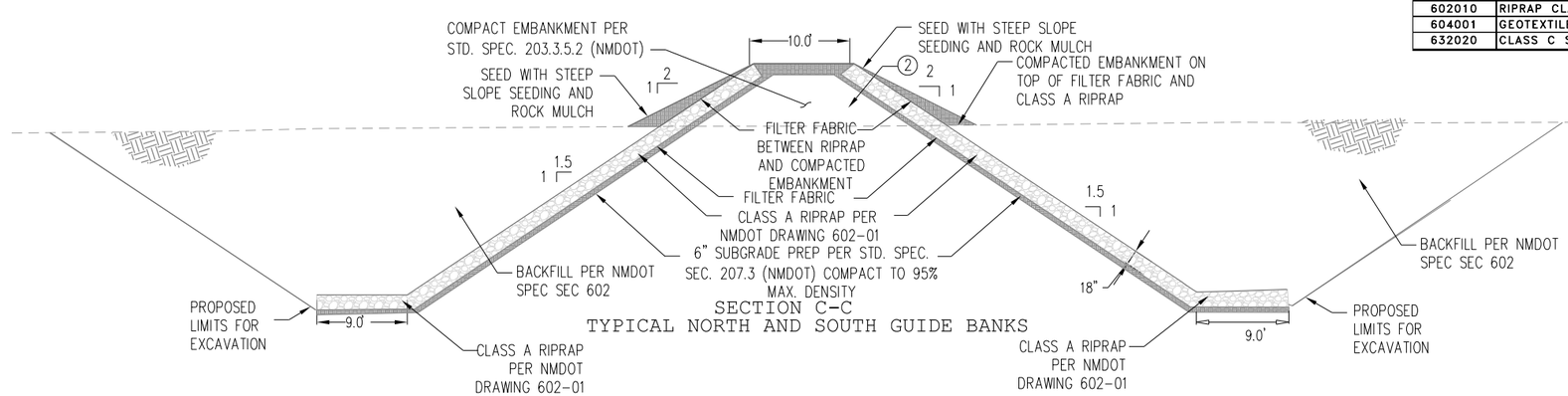

NO.	DESCRIPTION	DATE	BY
6			
5			
4			
3			
2			
1			

REVISIONS (OR CHANGE NOTICES)

CITY OF GALLUP

GUIDEBANK DETAILS

DRAWING SCALE: 1: 15

DESIGNED BY: BOHANNAN HUSTON
PHONE: 505-823-1000
EMAIL:

TOP OF RIPRAP Point Table			
○	NORTHING	EASTING	ELEVATION
1	1646996.98	2443227.22	6482.00
2	1647005.34	2443207.79	6482.00
3	NOT USED		
4	1646725.42	2443274.89	6459.00
5	1646739.34	2443269.18	6459.00
6	1646798.52	2443295.21	6459.00
7	1646776.50	2443641.94	6459.00
8	1646779.57	2443650.40	6459.00
9	1647209.89	2443506.21	6459.00
10	1647206.82	2443497.75	6459.00
11	1646879.08	2443632.36	6459.00
12	1646870.20	2443630.87	6459.00
13	1646791.35	2443682.82	6482.00
14	1646846.21	2443426.51	6459.00
15	1646745.87	2443300.54	6482.00
16	1646767.36	2443310.48	6482.00
17	1646737.35	2443304.04	6482.00
18	1647123.56	2443545.60	6459.00
19	1647117.54	2443552.29	6459.00
20	1646964.66	2443238.71	6459.00
21	1646992.09	2443176.16	6459.00
22	1647015.51	2443166.17	6459.00
23	NOT USED		
24	1647028.79	2443198.01	6482.00
25	1646810.39	2443444.15	6482.00
26	1646793.06	2443687.52	6482.00
27	1647221.64	2443538.64	6482.00
28	NOT USED		
29	1646813.46	2443437.37	6482.00
30	1647007.42	2443356.97	6459.00
31	1646806.55	2443724.65	6459.00
32	1647236.81	2443580.48	6459.00

TOP OF RIPRAP Point Table			
○	NORTHING	EASTING	ELEVATION
33	1647044.52	2443343.40	6482.00
34	1647223.35	2443543.34	6482.00
35	1647039.79	2443345.04	6482.00
36	1646997.30	2443221.51	6483.50
37	1647031.73	2443316.26	6483.50
38	1646755.54	2443362.85	6491.00
39	1646760.86	2443377.55	6483.62
40	1646782.91	2443353.20	6482.00
41	1646788.12	2443367.59	6482.00
42	1647228.05	2443541.64	6482.00
43	1647225.05	2443548.04	6482.00
44	1646788.36	2443689.23	6482.00
45	1646794.77	2443692.22	6482.00
46	1647025.97	2443215.88	6493.30
47	1647021.01	2443201.67	6486.07(CL B)
48	1647019.80	2443283.44	6483.50
49	1647047.04	2443273.66	6492.52
50	1647041.85	2443258.77	6494.19
51	1646998.90	2443226.25	6483.50
52	1647014.41	2443268.65	6483.50
53	1646734.46	2443305.36	6482.91
54	1646739.48	2443320.18	6490.17
55	1646766.95	2443310.00	6482.00
56	1646820.11	2443478.55	6482.00
57	1646857.37	2443465.01	6459.00
58	1646828.47	2443518.07	6482.00
59	1646866.03	2443504.43	6459.00
60	1646833.60	2443558.77	6482.00
61	1646871.77	2443544.90	6459.00
62	1646834.22	2443601.10	6482.00
63	1646873.79	2443586.72	6459.00
64	1646826.39	2443646.51	6482.00
65	1646862.24	2443662.39	6459.00
66	1647022.24	2443394.06	6459.00
67	1647059.42	2443380.54	6482.00
68	1647039.49	2443430.35	6459.00
69	1647076.86	2443416.77	6482.00
70	1647059.38	2443465.68	6459.00
71	1647097.16	2443451.95	6482.00
72	1647082.49	2443499.84	6459.00
73	1647121.14	2443485.79	6482.00
74	1647109.96	2443532.42	6459.00
75	1647150.79	2443517.58	6482.00
76	1647144.67	2443562.36	6459.00
77	1647195.33	2443543.95	6482.00

FINISHED GRADING Point Table			
○	NORTHING	EASTING	ELEVATION
79	1646960.97	2443193.05	6479.00
80	1646956.41	2443190.77	6480.00
81	1646952.21	2443188.60	6481.00
82	1646945.23	2443189.97	6481.00
83	1646943.45	2443193.38	6480.00
84	1646941.71	2443196.70	6479.00
85	1646939.83	2443200.21	6478.00
86	1646960.36	2443275.83	6476.00
87	1646970.06	2443286.89	6475.31
88	1646962.79	2443324.47	6474.87
89	1646983.68	2443361.53	6475.60
90	1646982.81	2443370.64	6474.85
91	1647005.54	2443450.34	6474.70
92	1647036.32	2443564.74	6475.00
93	1647038.55	2443570.43	6476.00
94	1647040.93	2443576.12	6477.00
95	1647043.75	2443581.86	6478.00
96	1647049.98	2443589.28	6479.00
97	1647053.12	2443594.91	6480.00
98	1647056.13	2443600.85	6481.00
99	1647059.17	2443607.01	6482.00
100	1647062.16	2443612.75	6483.00
101	1647070.00	2443614.78	6483.00
102	1647071.18	2443609.96	6482.00
103	1647072.32	2443605.10	6481.00
104	1647072.92	2443600.13	6480.00
105	1647074.53	2443595.33	6479.00
106	1647116.86	2443601.31	6478.00
107	1647127.84	2443599.18	6477.00
108	1647152.77	2443600.64	6476.00
109	1647176.65	2443601.58	6475.00
110	1646779.83	2443264.66	6475.00
111	1646787.40	2443260.75	6476.00
112	1646794.28	2443256.84	6477.00
113	1646797.15	2443253.48	6478.00
114	1646800.10	2443250.16	6479.00
115	1646803.12	2443246.75	6480.00
116	1646806.29	2443243.38	6481.00
117	1646815.64	2443242.20	6481.00
118	1646819.70	2443244.72	6480.00
119	1646823.86	2443247.29	6479.00
120	1646828.24	2443249.74	6478.00
121	1646832.59	2443252.26	6477.00
122	1646836.95	2443254.79	6476.00
123	1646841.26	2443257.21	6475.00
124	1646851.78	2443301.88	6474.00
125	1646859.85	2443352.82	6474.60
126	1646867.39	2443377.78	6475.00
127	1646871.37	2443407.21	6476.00
128	1646872.97	2443425.24	6477.00
129	1646874.56	2443447.25	6478.00
130	1646872.97	2443460.51	6479.00
131	1646872.44	2443502.66	6480.00
132	1646876.94	2443533.95	6479.00
133	1646897.57	2443572.33	6477.00
134	1646905.53	2443591.15	6476.00
135	1646926.09	2443686.60	6475.00
136	1646921.05	2443689.25	6476.00
137	1646917.60	2443691.37	6477.00
138	1646913.35	2443693.49	6478.00
139	1646909.64	2443695.88	6479.00
140	1646901.42	2443699.33	6481.00
141	1646885.76	2443702.51	6482.00
142	1646880.46	2443700.39	6481.00
143	1646875.68	2443698.00	6479.00
144	1646870.62	2443696.43	6478.00
145	1646865.46	2443694.61	6477.00
146	1646860.76	2443692.19	6476.00

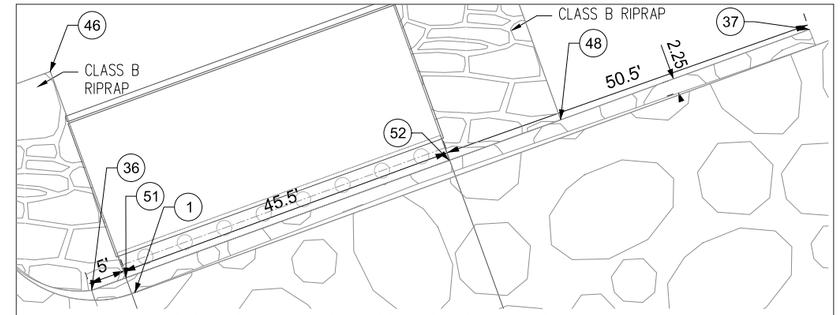

INSERT: ADDITIONAL CLASS B RIPRAP UNDER BRIDGE

SCALE: 1"=20' (NORTH SIDE ONLY)

ANNA Q. CAFFREY
NEW MEXICO
18095
10-4-16
LICENSED PROFESSIONAL ENGINEER

NO.	DESCRIPTION	DATE	BY
6			
5			
4			
3			
2			
1			

REVISIONS (OR CHANGE NOTICES)

CITY OF GALLUP

CHANNEL GRADING
& GUIDEBANKS
FOR THE RIO PUERCO

DRAWING SCALE: 1: 60

DESIGNED BY: BOHANNAN HUSTON PHONE: 505-823-1000 EMAIL:

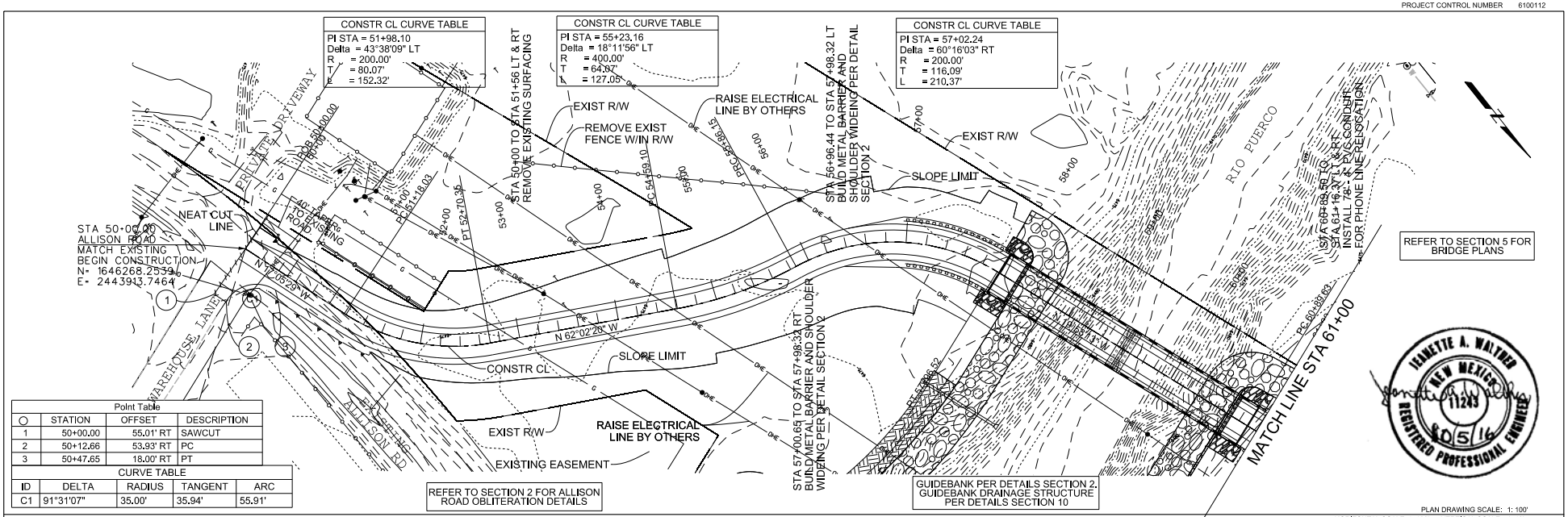

Point Table			
○	STATION	OFFSET	DESCRIPTION
1	50+00.00	55.01' RT	SAWCUT
2	50+12.66	53.93' RT	PC
3	50+47.65	18.00' RT	PT

CURVE TABLE				
ID	DELTA	RADIUS	TANGENT	ARC
C1	91°31'07"	35.00'	35.94'	55.91'

PLAN DRAWING SCALE: 1: 100'
HORIZONTAL SCALE: 1: 100' VERTICAL SCALE: 1: 10'

NOTE: SIMPLE CURVES ON THIS PROJECT ARE BASED ON THE ARC DEFINITION (RADIUS 1° = 5729.578').

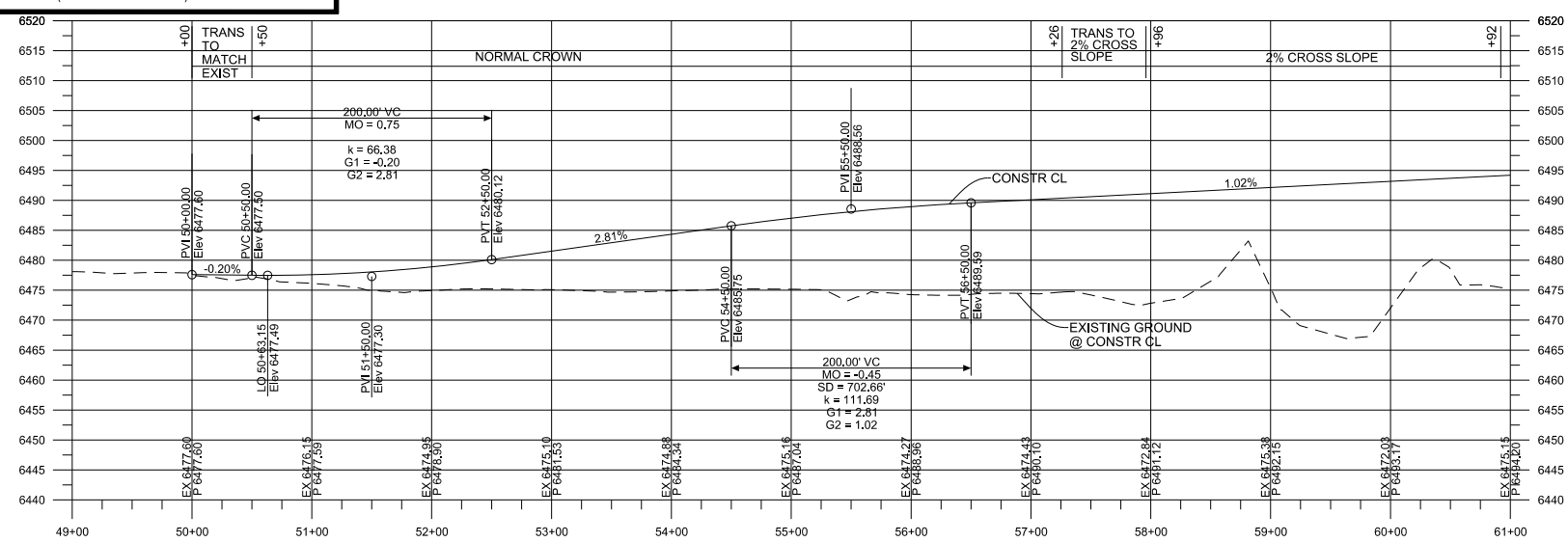

DESIGNED BY: BOHANNAN HUSTON PHONE: 505-823-1000 EMAIL: jpoorhaugh@bhinc.com

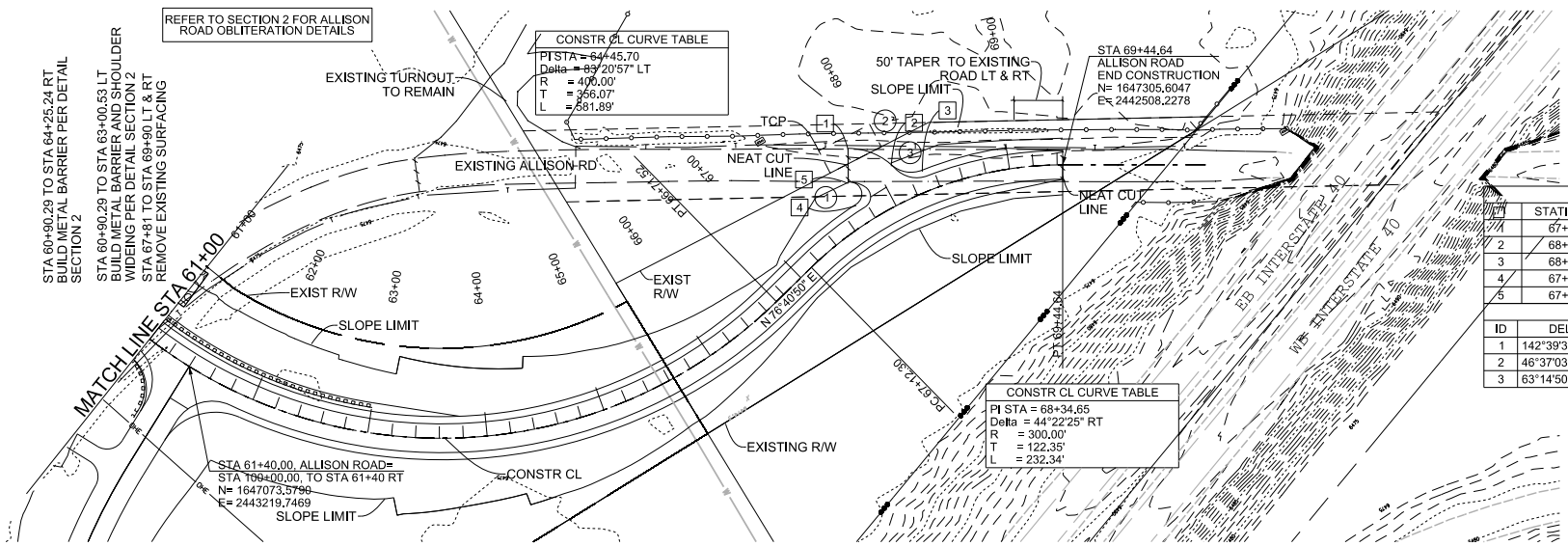

Point Table			
ID	STATION	OFFSET	DESCRIPTION
1	67+89.00	61.30' LT	PC
2	68+11.18	32.50' LT	PRC
3	68+31.34	18.00' LT	PT
4	67+72.90	18.00' LT	PC
5	67+76.72	37.22' LT	PT

CURVE TABLE				
ID	DELTA	RADIUS	TANGENT	ARC
1	142°39'38"	10.00'	29.60'	24.90'
2	46°37'03"	54.00'	23.27'	43.94'
3	63°14'50"	25.00'	15.39'	27.60'

JEANETTE A. WALTHER NEW MEXICO 11243 REGISTERED PROFESSIONAL ENGINEER 10/5/16

PLAN DRAWING SCALE: 1: 100'
HORIZONTAL SCALE: 1: 100' VERTICAL SCALE: 1: 10'

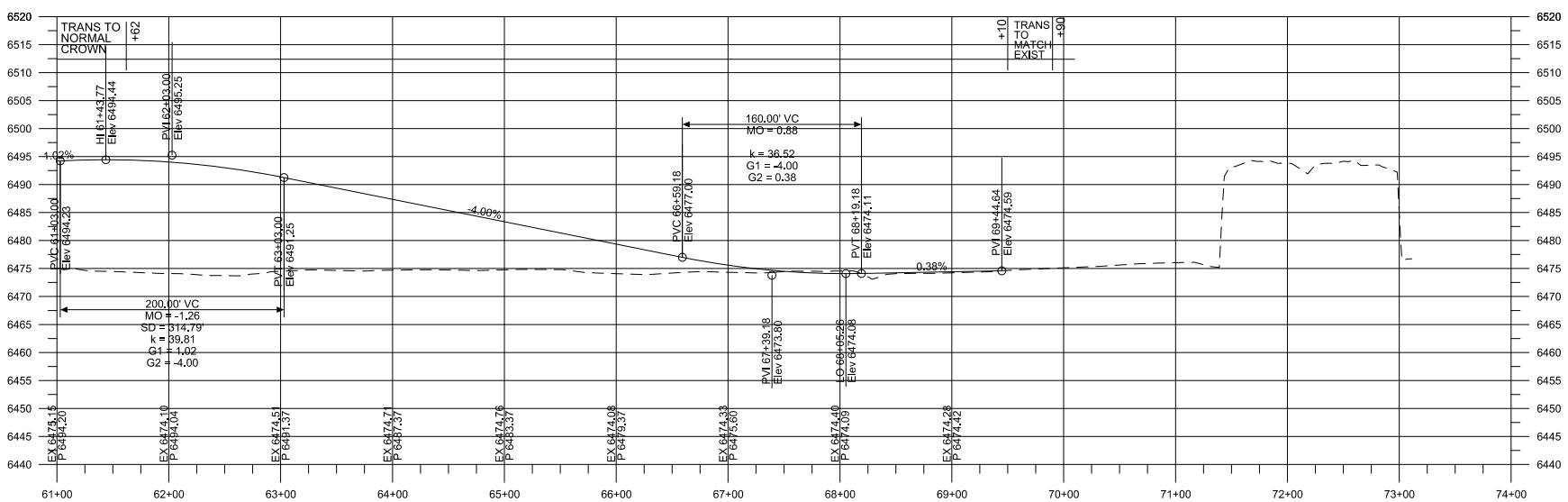

DESIGNED BY: BOHANNAN HUSTON PHONE: 505-823-1000 EMAIL: jpoorhaugh@bhinc.com

PROJECT CONTROL NUMBER 6100112

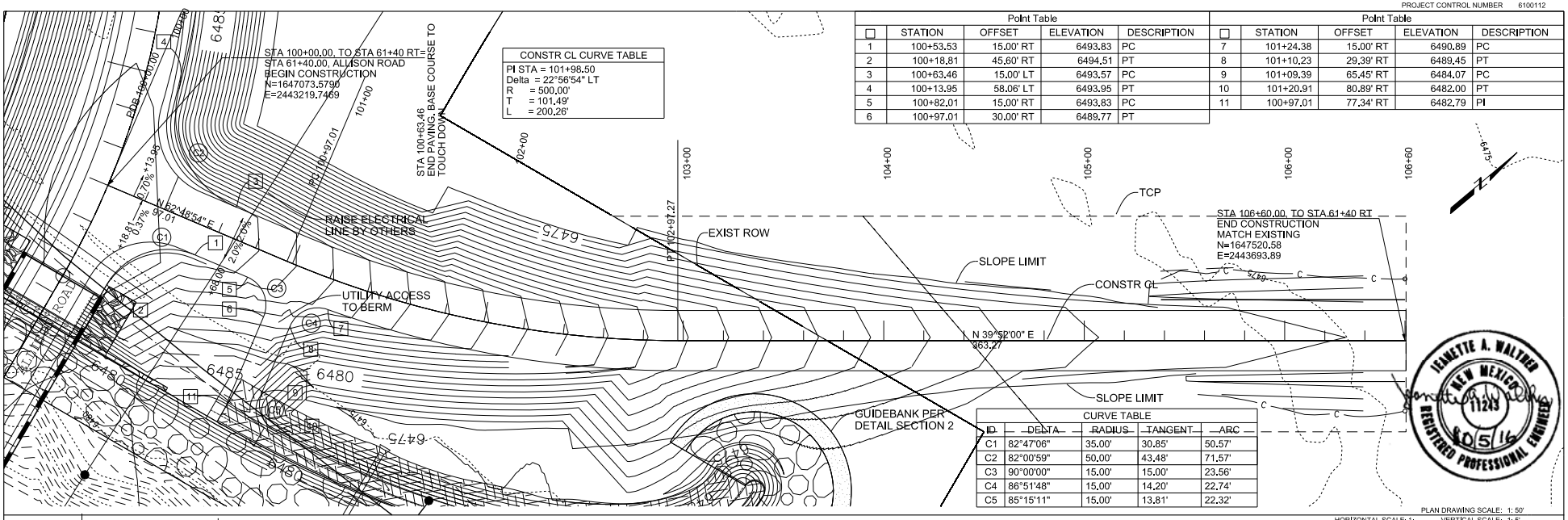

CONSTR CL CURVE TABLE
PI STA = 101+98.50
Delta = 22°56'54" LT
R = 500.00'
T = 101.49'
L = 200.26'

Point Table

☐	STATION	OFFSET	ELEVATION	DESCRIPTION
1	100+53.53	15.00' RT	6493.83	PC
2	100+18.81	45.60' RT	6494.51	PT
3	100+63.46	15.00' LT	6493.57	PC
4	100+13.95	58.06' LT	6493.95	PT
5	100+82.01	15.00' RT	6493.83	PC
6	100+97.01	30.00' RT	6489.77	PT

Point Table

☐	STATION	OFFSET	ELEVATION	DESCRIPTION
7	101+24.38	15.00' RT	6490.89	PC
8	101+10.23	29.39' RT	6489.45	PT
9	101+09.39	65.45' RT	6484.07	PC
10	101+20.91	80.89' RT	6482.00	PT
11	100+97.01	77.34' RT	6482.79	PI

CURVE TABLE

ID	DELTA	RADIUS	TANGENT	ARC
C1	82°47'06"	35.00'	30.85'	50.57'
C2	82°00'59"	50.00'	43.48'	71.57'
C3	90°00'00"	15.00'	15.00'	23.56'
C4	86°51'48"	15.00'	14.20'	22.74'
C5	85°15'11"	15.00'	13.81'	22.32'

JEANETTE A. WALTHER
NEW MEXICO
11283
REGISTERED PROFESSIONAL ENGINEER
10/5/16

PLAN DRAWING SCALE: 1: 50'
HORIZONTAL SCALE: 1: VERTICAL SCALE: 1: 5'

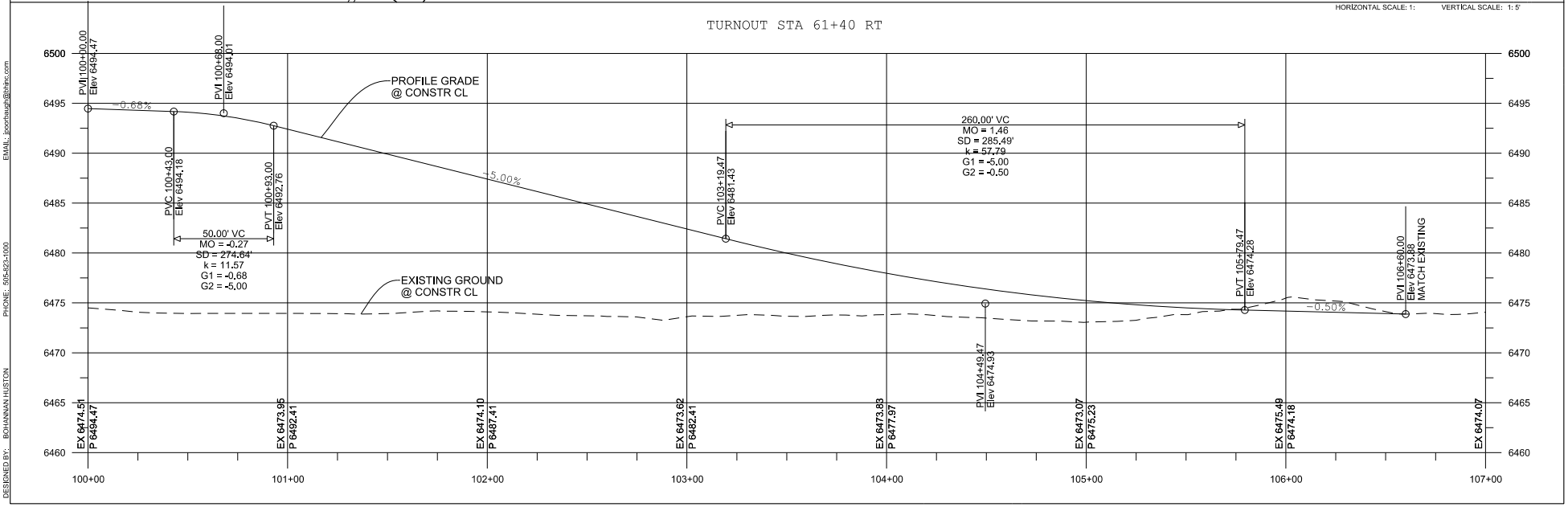

DESIGNED BY: BOHANNAN HUSTON
PHONE: 505-823-1000
EMAIL: jpoorhaugh@bhinc.com

$usernameS
$DATES $$timeS$ Design File: $FILEL$

NEW MEXICO PROJECT NO.

SHEET NO. 3 - 3

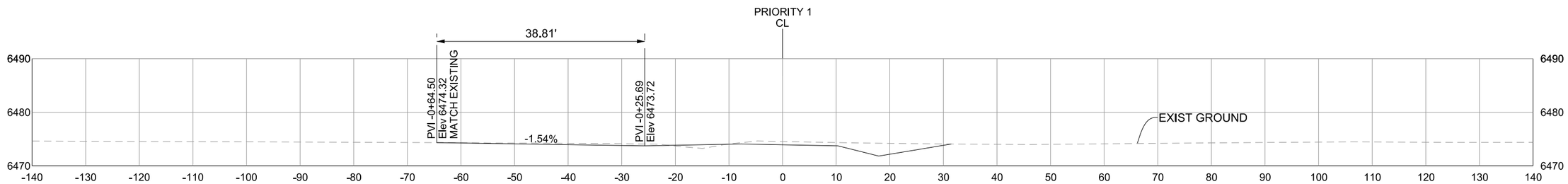

STA 67+60 LT, NOR

BUILD 1- 28' TURNOUT
PAVE TO TOUCH DOWN.

DESIGNED BY: BOHANNAN HUSTON PHONE: 505-823-1000 EMAIL:

JEANETTE A. WALTHER
NEW MEXICO
11243
10/5/16
REGISTERED PROFESSIONAL ENGINEER

NO.	DESCRIPTION	DATE	BY
6			
5			
4			
3			
2			
1			

REVISIONS (OR CHANGE NOTICES)

CITY OF GALLUP

TURNOUT PROFILE
SHEET

DRAWING SCALE: 1: 20

Bohannan Huston
www.bhinc.com 800.877.5332

INDEX OF SHEETS

5-1 BRIDGE GENERAL NOTES, SHEET 1 OF 2
5-2 BRIDGE GENERAL NOTES, SHEET 2 OF 2
5-3 ESTIMATED QUANTITIES
5-4 FOUNDATION NOTES AND SUBSTRUCTURE LAYOUT
5-5 BORING LOGS SHEET 1 OF 5
5-6 BORING LOGS SHEET 2 OF 5
5-7 BORING LOGS SHEET 3 OF 5
5-8 BORING LOGS SHEET 4 OF 5
5-9 BORING LOGS SHEET 5 OF 5
5-10 BRIDGE LOCATION PLAN
5-11 BRIDGE PROFILE
5-12 TRANSVERSE SECTION
5-13 LONGITUDINAL SECTION
5-14 BEARING DETAILS
5-15 DECK REINFORCING PLAN, SPAN 1
5-16 DECK REINFORCING PLAN, SPAN 2
5-17 DECK DETAILS, SHEET 1 OF 2
5-18 DECK DETAILS, SHEET 2 OF 2
5-19 TOP OF SLAB ELEVATIONS
5-20 SEAT ELEVATION DETAILS
5-21 PRESTRESSED GIRDER DETAILS, SHEET 1 OF 2
5-22 PRESTRESSED GIRDER DETAILS, SHEET 2 OF 2
5-23 DIAPHRAGM DETAILS
5-24 ABUTMENT NO. 1 AND NO. 2 PLAN AND ELEVATION
5-25 ABUTMENT DETAILS, SHEET 1 OF 2
5-26 ABUTMENT DETAILS, SHEET 2 OF 2
5-27 PIER CAP AND COLUMN ELEVATION
5-28 PIER CAP PLAN AND ELEVATION
5-29 PIER CAP AND COLUMN DETAILS
5-30 PIER REINFORCING SCHEDULE AND MISCELLANEOUS DETAILS
5-31 WINGWALL DETAILS
5-32 APPROACH SLAB DETAILS, SHEET 1 OF 3
5-33 APPROACH SLAB DETAILS, SHEET 2 OF 3
5-34 APPROACH SLAB DETAILS, SHEET 3 OF 3
5-35 REINFORCING SCHEDULES

DESIGN DATA

THE DESIGN IS IN ACCORDANCE WITH THE AASHTO LRFD BRIDGE DESIGN SPECIFICATIONS, SEVENTH EDITION, WITH CURRENT INTERIMS.

DESIGN STRESSES:

STRUCTURAL STEEL -	AASHTO M270, GRADE 50 Fy = 50 KSI, UNLESS NOTED OTHERWISE
REINFORCED CONCRETE -	
SUPERSTRUCTURE	F'c = 4000 PSI AT 28 DAYS
SUBSTRUCTURE	F'c = 3000 PSI AT 28 DAYS Fy = 60 KSI GRADE 60 N = 9
LIVE LOAD -	HL-93 P327-13 PERMIT TRUCK, SEE DETAIL, SHEET 5-2
WEARING SURFACE -	30 PSF ALLOWANCE FOR FUTURE OVERLAY
STAY-IN-PLACE DECK FORM -	15 PSF
WIND VELOCITY -	100 MPH
SEISMIC ZONE -	1
MAXIMUM COMPUTED DRIVEN PILE LOADS -	SEE FOUNDATION NOTES ON SHEET 5-4

1. WORKMANSHIP AND MATERIALS SHALL CONFORM TO THE NEW MEXICO STATE DEPARTMENT OF TRANSPORTATION STANDARD SPECIFICATIONS FOR HIGHWAY AND BRIDGE CONSTRUCTION, 2014 EDITION WITH APPLICABLE SUPPLEMENTAL SPECIFICATIONS AND SPECIAL PROVISIONS.

2. ALL DIMENSIONS ARE IN FEET AND INCHES UNLESS NOTED OTHERWISE.

3. DRILL-HOLE INFORMATION: THE OWNER IS NOT RESPONSIBLE FOR ANY INTERPRETATIONS OR ASSUMPTIONS MADE BY THE CONTRACTOR BASED ON THE DRILL-HOLE INFORMATION SHOWN ON THE PLANS.

4. SUPERSTRUCTURE CONCRETE SHALL BE CLASS HPD AND SUBSTRUCTURE CONCRETE SHALL BE CLASS A. CHAMFER ALL EXPOSED EDGES OF STRUCTURES 3/4" UNLESS OTHERWISE NOTED.

5. FINISHING: CONCRETE SURFACES SHALL RECEIVE AESTHETIC BRIDGE TREATMENTS, PER OWNER REQUIREMENTS.

6. DECK SLAB: THE SURFACE OF THE DECK AND THE APPROACH SLAB SHALL BE LONGITUDINALLY MACHINE-GROOVED IN ACCORDANCE WITH THE SPECIFICATION REQUIREMENTS FOR GROOVING HARDENED CONCRETE. DECK SLAB CONCRETE SHALL BE PLACED IN ACCORDANCE WITH THE DECK SLAB PLACEMENT SEQUENCE SHOWN ON SHEET 5-18. AFTER GROOVING, ALL VISIBLE DECK AND APPROACH SLAB CRACKS SHALL BE SEALED WITH A HIGH MOLECULAR WEIGHT METHACRYLATE RESIN (HMWM) AS SPECIFIED IN SECTION 535 - CRACK SEALING USING LOW VISCOSITY, GRAVITY FED SEALERS. THE HMWM SHALL BE FOLLOWED WITH AN EPOXY URETHANE POLYMER OVERLAY AS SPECIFIED IN SECTION 536 - POLYMER CONCRETE BRIDGE DECK OVERLAY. THE HMWM SYSTEM AND OVERLAY SYSTEM SHALL BE VERIFIED FOR COMPATIBILITY.

7. REINFORCING BARS SHALL BE GRADE 60. DIMENSIONS SHOWN REFER TO THE CENTERLINE OF THE BARS UNLESS NOTED OTHERWISE. PROVIDE EPOXY COATED REINFORCING BARS FOR SUPERSTRUCTURE INCLUDING DECK, APPROACH SLABS, SIDEWALKS, DIAPHRAGMS INTEGRAL WITH DECK, AND APPROACH SLAB SLEEPER FOOTINGS.

8. VENTILATED PERMANENT STEEL DECK FORMS SHALL BE UTILIZED FOR SLAB CONSTRUCTION ON THIS STRUCTURE. COMPLETE SHOP PLANS, DESIGN CALCULATIONS, AND SPECIFICATIONS FOR THE PROPOSED FORMING SYSTEM MUST BE APPROVED BY THE BRIDGE ENGINEER PRIOR TO INSTALLATION. THE COST OF THE STAY-IN-PLACE DECK FORMS SHALL BE INCLUDED IN THE UNIT PRICE FOR ITEM No. 512003-HIGH PERFORMANCE CONCRETE (HPD).

9. STRUCTURAL STEEL SHALL BE CARBON STEEL CONFORMING TO AASHTO SPECIFICATION M270, GRADE 50, UNLESS NOTED OTHERWISE. SHOP PLANS MUST BE APPROVED BY THE BRIDGE ENGINEER BEFORE FABRICATION IS STARTED.

10. BRIDGE NUMBER PLATES: THE CONTRACTOR SHALL FURNISH TWO BRIDGE NUMBER PLATES CONFORMING TO THE DETAILS SHOWN ON SHEET 5-2. THE COST OF THE PLATES SHALL BE CONSIDERED INCIDENTAL TO BID ITEM 514042 - CONCRETE BARRIER RAILINGS 42" AND NO SEPARATE PAYMENT WILL BE MADE.

11. OPEN HOLES IN GIRDERS: AFTER COMPLETION OF SUPERSTRUCTURE, ALL OPEN HOLES IN EXTERIOR GIRDERS ARE TO BE PACKED WITH GROUT.

12. BOLTED CONNECTIONS: BOLTED CONNECTIONS SHALL BE MADE WITH HIGH STRENGTH BOLTS UNLESS OTHERWISE NOTED. THE SIZES OF THE BOLTS ARE NOTED ON THE DETAILS.

13. WATER REPELLENT TREATMENT AREA: A PENETRATING WATER REPELLENT TREATMENT IS TO BE APPLIED TO CONCRETE SURFACES PER THE STANDARD SPECIFICATION SECTION 511.3.9.6.

14. ALL EXPOSED STRUCTURAL STEEL SHALL BE PAINTED AS PER SECTION 544 - PROTECTIVE COATING OF NEW STRUCTURAL STEEL OF THE SPECIFICATIONS. THE COLOR OF THE TOP AND PROTECTIVE COATS OF PAINT SHALL BE SELECTED BY THE PROJECT MANAGER DURING CONSTRUCTION. PAINTING SHALL BE CONSIDERED INCIDENTAL TO BID ITEM 541000 - STRUCTURAL STEEL FOR CONCRETE BRIDGES AND NO ADDITIONAL PAYMENT WILL BE MADE.

15. PROTECTION FOR RIO PUERCO: THE CONTRACTOR SHALL CONSTRUCT A TEMPORARY FLOOR OR NETTING ACCEPTABLE TO THE PROJECT MANAGER UNDER THE WORK AREA OVER RIO PUERCO THUS PREVENTING ANY DEBRIS OR CONSTRUCTION MATERIAL FROM FALLING ONTO RIO PUERCO DURING CONSTRUCTION OF THE BRIDGE. COST FOR THE PROTECTION FOR RIO PUERCO SHALL BE INCLUDED IN ITEM NO. 547000 - SAFETY AND ENVIRONMENTAL REQUIREMENTS.

CAPACITY RATINGS

METHOD	LFR	LRFR RATING FACTORS
INVENTORY	HS28.32	1.01
OPERATING	HS47.68	1.46

THESE RATINGS WERE COMPUTED BY THE LOAD FACTOR RATING (LFR) AND THE LOAD AND RESISTANCE FACTOR RATING (LRFR) METHODS USING THE AASHTOWARE BRIDGE RATING PROGRAM VERSION 6.7.0.

BRIDGE NO. 9718
REPLACES
BRIDGE NO. 4231

AMANDA J. WHITE
NEW MEXICO
19215
PROFESSIONAL ENGINEER
10/7/16

NO.	DESCRIPTION	DATE	BY
3			
2			
1			

REVISIONS

NEW MEXICO DEPARTMENT OF TRANSPORTATION

CITY OF GALLUP
ALLISON ROAD
BRIDGE OVER RIO PUERCO
BRIDGE NO.9718

BRIDGE GENERAL NOTES
SHEET 1 OF 2

DESIGNED BY: AJW DRAWN BY: LSM CHECKED BY: SMM
DESIGNED BY: BOHANNAN HUSTON INC. PHONE: 505-823-1000 EMAIL:

Bohannan Huston
www.bhinc.com 800.877.5332

BRIDGE NUMBER PLATE NOTES

NOTES:
1. TWO PLATES PER BRIDGE WITH GALVANIZED FLAT HEAD BOLTS IN EXPANSION SHIELDS ARE REQUIRED. THE PLATES SHALL BE GALVANIZED CAST IRON WITH RAISED BLOCK LETTERS OF NEAT SQUARE CUT DESIGN. GRIND FACE OF LETTERS AND BORDERS SMOOTH. BRONZE PLATES AND BOLTS MAY BE SUBSTITUTED FOR GALVANIZED CAST IRON.

2. ONE PLATE IS TO BE PLACED AT EACH END OF THE BRIDGE ON THE ROADWAY FACE OF THE CONCRETE BARRIER RAILING AT THE END OF THE DECK AND LOCATED ON THE RIGHT-HAND SIDE AS ONE APPROACHES BRIDGE.

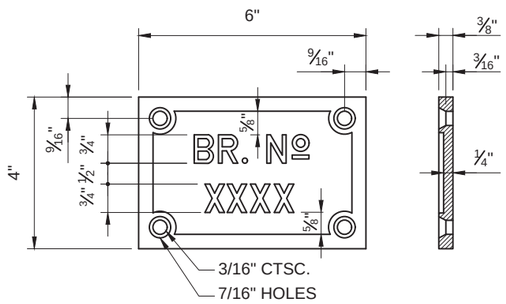

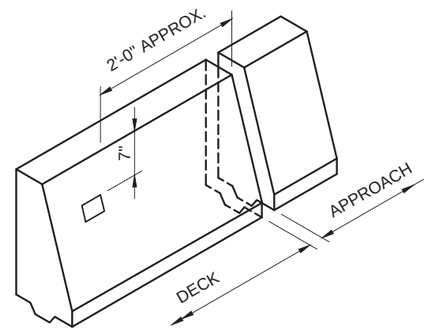

BRIDGE NUMBER PLATE DETAILS

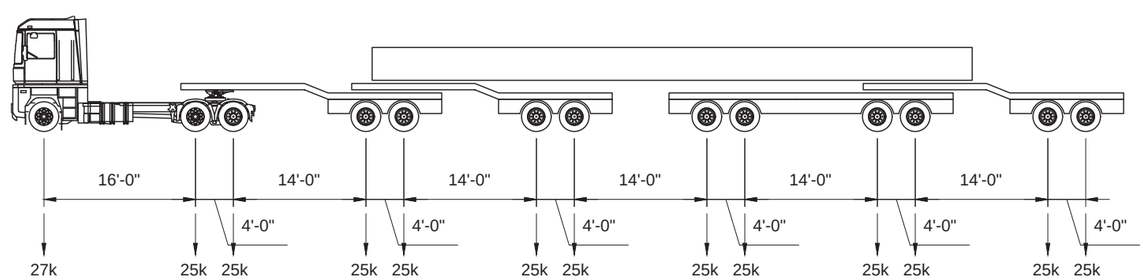

NMDOT PERMIT TRUCK P327-13

AMANDA J. WHITE
NEW MEXICO
19215
10/7/16
PROFESSIONAL ENGINEER

NO.	DESCRIPTION	DATE	BY
3			
2			
1			

REVISIONS

NEW MEXICO DEPARTMENT OF TRANSPORTATION

CITY OF GALLUP
ALLISON ROAD
BRIDGE OVER RIO PUERCO
BRIDGE NO. 9718

BRIDGE GENERAL NOTES
SHEET 2 OF 2

DESIGNED BY: AJW DRAWN BY: LSM CHECKED BY: SMM
DESIGNED BY: BOHANNAN HUSTON INC. PHONE: 505-823-1000 EMAIL:

Bohannan Huston
www.bhinc.com 800.877.5332

ESTIMATED QUANTITIES

ITEM		UNIT	SUPER-STRUCTURE	SUBSTRUCTURE			APPROACH SLAB	TOTAL
				ABUT. No 1	PIER No 1	ABUT. No 2		
210000	EXCAVATION AND BACKFILL FOR MAJOR STRUCTURES	CU.YD.		2434	486	2434		5354
501100	PILE SPLICES	EACH		1	2	1		4
501101	PILE CUTOFF	LIN.FT.		34	108	34		176
501124	DRIVEN PILES (24" PIPE)	LIN. FT.		680	2160	680		3520
504301	PILE DYNAMIC TEST CONSULTANT TESTING	EACH		2	2	2		6
504401	CASE PILE WAVE ANALYSIS TEST CONSULTANT TESTING	EACH		4	4	4		12
511300	SUBSTRUCTURE CONCRETE CLASS A	CU.YD.		25	170	25		220
511601	WIND BREAK	L.S.	L.S.					L.S.
511602	FOGGING SYSTEM	L.S.	L.S.					L.S.
512003	HIGH PERFORMANCE CONCRETE (HPD)	CU.YD.	315	33	51	33	39	471
514042	CONCRETE BARRIER RAILINGS 42”	LIN.FT.	580				74	654
518074	PRESTRESSED CONCRETE MEMBER TYPE 72-MODIFIED	LIN.FT.	1504					1504
535000	CRACK SEALING	SQ. YD.	1264					1264
536001	EPOXY URETHANE POLYMER CONCRETE BRIDGE DECK OVERLAY	SQ.YD.	1264					1264
540060	REINFORCING BARS GRADE 60	LBS.		11438	35523	11430		58391
540160	EPOXY COATED REINFORCING BARS GRADE 60	LBS.	108317	2543	1479	2543	17504	132386
541000	STRUCTURAL STEEL FOR CONCRETE BRIDGES	LBS.	16870					16870
547000	SAFETY AND ENVIRONMENTAL REQUIREMENTS	L.S.	L.S.					L.S.
562000	BRIDGE JOINT STRIP SEAL	LIN.FT.	28					28
564000	PREFORMED CLOSED CELL FOAM BRIDGE JOINT SEALS	LIN.FT.	95					95
601000	REMOVAL OF STRUCTURES AND OBSTRUCTIONS	L.S.	L.S.					L.S.

* SEE SHEET 2-10 FOR RIPRAP QUANTITIES.

AMANDA J. WHITE
NEW MEXICO
19215
PROFESSIONAL ENGINEER
10/7/16

NO.	DESCRIPTION	DATE	BY
3			
2			
1			

REVISIONS

NEW MEXICO DEPARTMENT
OF TRANSPORTATION

CITY OF GALLUP
ALLISON ROAD
BRIDGE OVER RIO PUERCO
BRIDGE NO. 9718

ESTIMATED QUANTITIES

DESIGNED BY: BOHANNAN HUSTON INC. PHONE: 505-823-1000 EMAIL:
DESIGNED BY: AJW DRAWN BY: LSM CHECKED BY: SMM

Bohannan Huston
www.bhinc.com 800.877.5332

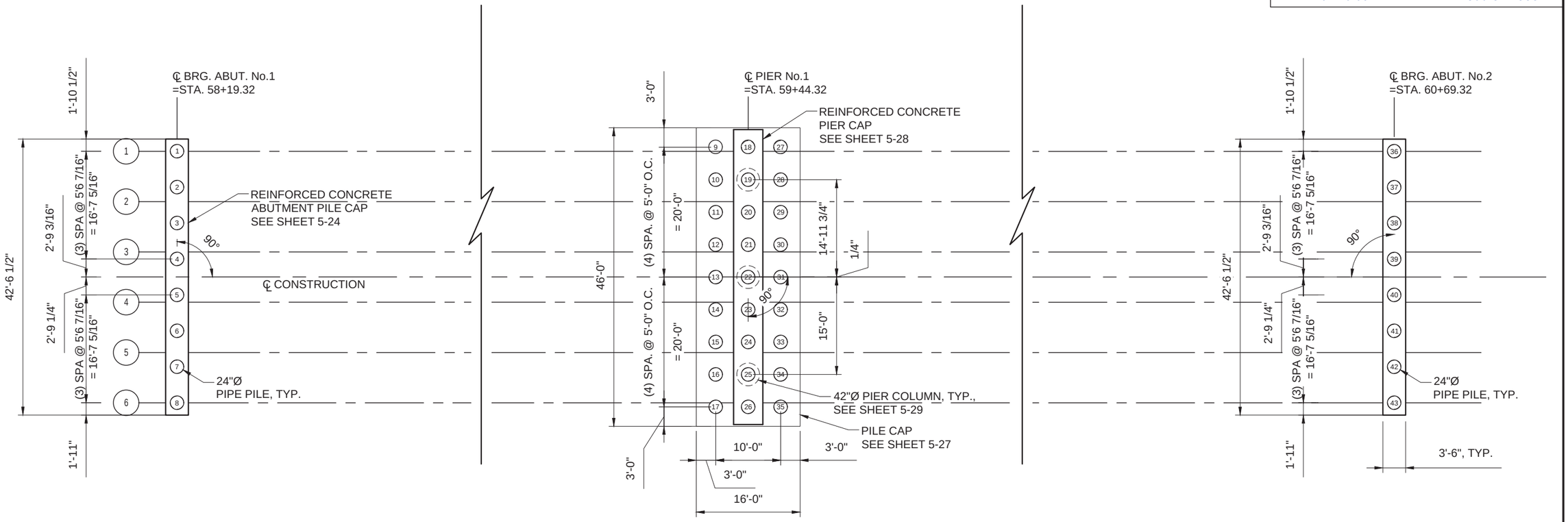

SUBSTRUCTURE LAYOUT

FOUNDATION NOTES

1. ALL PILING SHALL BE 24" O.D. x 5/8" THICK WALL STEEL PILES WITH A MINIMUM YIELD STRESS OF 50 KSI AND SHALL CONFORM TO THE REQUIREMENTS OF ASTM A572 GRADE 50.
2. PILES SHALL BE DRIVEN WITH AN APPROVED HAMMER SYSTEM CAPABLE OF DEVELOPING 186,000 FT-LBS OF ENERGY.
3. WAVE EQUATION ANALYSIS WILL BE USED TO DETERMINE THE FIELD ACCEPTANCE CRITERIA. PILES SHALL BE DRIVEN WITH THE APPROVED DRIVING EQUIPMENT TO THE REQUIRED ULTIMATE CAPACITY.
4. DRIVEN PILES SHALL BE INSTALLED AS DETAILED IN SECTION 501 OF THE 2014 NEW MEXICO STATE DEPARTMENT OF TRANSPORTATION STANDARD SPECIFICATIONS FOR HIGHWAY AND BRIDGE CONSTRUCTION.

DRIVEN PILE REQUIREMENTS

LOCATION	PILE TYPE	QUANTITY	EST. LENGTH (ft.)	TOP OF PILE ELEVATION (ft.)	EST. PENETRATION ELEVATION (ft.)**	MIN. PENETRATION ELEVATION (ft.)**	FACTORED LOAD-STRENGTH I (kip)	* NOMINAL RESISTANCE LOAD/PILE (kip)
ABUTMENT NO. 1	24"Ø PIPE	8	85	6481.50	6396.50	6431.50	257	857
PIER NO. 1	24"Ø PIPE	27	80	6454.50	6374.50	6409.50	226	753
ABUTMENT NO. 2	24"Ø PIPE	8	85	6483.50	6398.50	6433.50	257	857

* RESISTANCE FACTOR: 0.30 FOR MEYERHOF SPT METHOD; 0.35 FOR α-METHOD

**SEE 501.3.5.2 AND 501.3.5.3 OF THE NMDOT STANDARD SPECIFICATIONS FOR ESTIMATED AND MINIMUM PILE REQUIREMENTS

AMANDA J. WHITE
NEW MEXICO
19215
PROFESSIONAL ENGINEER
10/7/16

NO.	DESCRIPTION	DATE	BY
3			
2			
1			

REVISIONS

NEW MEXICO DEPARTMENT OF TRANSPORTATION

CITY OF GALLUP
ALLISON ROAD
BRIDGE OVER RIO PUERCO
BRIDGE NO. 9718

FOUNDATION NOTES AND SUBSTRUCTURE LAYOUT

DESIGNED BY: AJW DRAWN BY: LSM CHECKED BY: SMM
DESIGNED BY: BOHANNAN HUSTON INC. PHONE: 505-823-1000 EMAIL:

Bohannan Huston
www.bhinc.com 800.877.5332

PROJECT Rio Puerco Bridge Replacement
Allison Road in Gallup, New Mexico
DATE 6/24/13
AMEC PROJECT NO. 13-517-00038

Page 1 **of** 1
BORING NO. B-1

LOCATION See Site Plan
RIG TYPE CME-75
BORING TYPE 8" HSA
SURFACE ELEV.
DATUM

Depth in Feet	Continuous Penetration Resistance	Graphical Log	Sample	Sample Type	Blows/ft. 140 lb. 30" free-fall drop hammer	Dry Density lbs. per cubic foot	Moisture Content Percent of Dry Weight	Unified Soil Classification	REMARKS	VISUAL CLASSIFICATION
0				S	12		3	SC	moderately firm	**CLAYEY SAND** fine grained, medium plasticity, brown
				S	25		14	CH	firm to very firm	**SILTY CLAY** few calcium carbonate, medium to high plasticity, brown
5				S	24		16			
				S	42		13			
10				S	46		17			
15				S	34		15			
20				U	69		15			
25				S	35					
								SP		**SAND** some coal ash, fine to medium grained, nonplastic, light brown
30				U	21			SC	moderately firm	**CLAYEY SAND** low plasticity, light brown
								SP	medium dense	**SAND** some iron oxide staining, nonplastic, brown
35				S	18					
40				U	35					
										Stopped auger @ 40' Stopped sampler @ 41' hole caved to 35'
45										
50										

GROUNDWATER

DEPTH	HOUR	DATE
none		

SAMPLE TYPE
A-Auger cuttings; NR-No Recovery
BS-Bulk Sample.
S-2" O.D. 1.38" I.D. tube sample.
U-3" O.D. 2.42" I.D. tube sample.
T-3" O.D. thin-walled Shelby tube.
G-Grab Sample

AMEC Environment & Infrastructure

GEOTECH_BH 13517-00038.RIO PUERCO BRIDGE REPLACEMENT.GPJ GINT STD US JANNEY.GDT 7/26/13

PROJECT Rio Puerco Bridge Replacement
Allison Road in Gallup, New Mexico
DATE 6/24/13
AMEC PROJECT NO. 13-517-00038

Page 1 **of** 2
BORING NO. B-2

LOCATION See Site Plan
RIG TYPE CME-75
BORING TYPE 8" HSA
SURFACE ELEV.
DATUM

Depth in Feet	Continuous Penetration Resistance	Graphical Log	Sample	Sample Type	Blows/ft. 140 lb. 30" free-fall drop hammer	Dry Density lbs. per cubic foot	Moisture Content Percent of Dry Weight	Unified Soil Classification	REMARKS	VISUAL CLASSIFICATION
0				S	19		5	SC	moderately firm to firm	**CLAYEY SAND** trace silt lenses, low to medium plasticity, brown
				S	11		4			
5				S	25		16	CH	firm to hard	**SILTY CLAY** high plasticity, brown
				S	34		17			
10				S	59		15			
15				U	50/6"		16			
20				T		101	11		qu - 9.91 tsf	
25				U	47		14			
30				S	61		16			
35				S	26		11			
40				U	34		1	SM	medium dense	**SILTY SAND** fine grained, nonplastic, light brown
45				S	23		11			
								CH		**SILTY CLAY** high plasticity, olive green
50										

GROUNDWATER

DEPTH	HOUR	DATE
none		

SAMPLE TYPE
A-Auger cuttings; NR-No Recovery
BS-Bulk Sample.
S-2" O.D. 1.38" I.D. tube sample.
U-3" O.D. 2.42" I.D. tube sample.
T-3" O.D. thin-walled Shelby tube.
G-Grab Sample

AMEC Environment & Infrastructure

GEOTECH_BH 13517-00038.RIO PUERCO BRIDGE REPLACEMENT.GPJ GINT STD US JANNEY.GDT 7/26/13

AMANDA J. WHITE
NEW MEXICO
19215
PROFESSIONAL ENGINEER
10/7/16

NO.	DESCRIPTION	DATE	BY
3			
2			
1			

REVISIONS

NEW MEXICO DEPARTMENT
OF TRANSPORTATION

CITY OF GALLUP
ALLISON ROAD
BRIDGE OVER RIO PUERCO
BRIDGE NO. 9718

BORING LOGS
SHEET 1 OF 5

DESIGNED BY: BOHANNAN HUSTON INC. PHONE: 505-823-1000 EMAIL: DESIGNED BY: AJW DRAWN BY: LSM CHECKED BY: SMM

Bohannan Huston
www.bhinc.com 800.877.5332

PROJECT Rio Puerco Bridge Replacement
Allison Road in Gallup, New Mexico
DATE 6/24/13
AMEC PROJECT NO. 13-517-00038

Page 2 **of** 2
BORING NO. B-2

LOCATION See Site Plan
RIG TYPE CME-75
BORING TYPE 8" HSA
SURFACE ELEV.
DATUM

Depth in Feet	Continuous Penetration Resistance	Graphical Log	Sample	Sample Type	Blows/ft. 140 lb. 30" free-fall drop hammer	Dry Density lbs. per cubic foot	Moisture Content Percent of Dry Weight	Unified Soil Classification	REMARKS	VISUAL CLASSIFICATION
50			X	S	41		23	CH	very firm	**SILTY CLAY** high plasticity, olive green with gray spots
55			X	S	34		20			
60				U	31		5	SP	medium dense	**SAND** fine to medium grained, nonplastic, brown
65			X	S	11		23	CL	moderately firm	**SANDY CLAY** trace silt, low to medium plasticity, brown
70			X	S	13		23			
75										Stopped auger @ 70' Stopped sampler @ 71.5' hole caved to 60'
80										
85										
90										
95										
100										

GROUNDWATER

DEPTH	HOUR	DATE
none		

SAMPLE TYPE
A-Auger cuttings; NR-No Recovery
BS-Bulk Sample.
S-2" O.D. 1.38" I.D. tube sample.
U-3" O.D. 2.42" I.D. tube sample.
T-3" O.D. thin-walled Shelby tube.
G-Grab Sample

AMEC Environment & Infrastructure

GEOTECH_BH 13517-00038.RIO PUERCO BRIDGE REPLACEMENT.GPJ GINT STD US JANNEY.GDT 7/26/13

PROJECT Rio Puerco Bridge Replacement
Allison Road in Gallup, New Mexico
DATE 6/24/13
AMEC PROJECT NO. 13-517-00038

Page 1 **of** 3
BORING NO. B-3

LOCATION See Site Plan
RIG TYPE CME-75
BORING TYPE 8" HSA
SURFACE ELEV.
DATUM

Depth in Feet	Continuous Penetration Resistance	Graphical Log	Sample	Sample Type	Blows/ft. 140 lb. 30" free-fall drop hammer	Dry Density lbs. per cubic foot	Moisture Content Percent of Dry Weight	Unified Soil Classification	REMARKS	VISUAL CLASSIFICATION
0								SC-SM	moderately firm	**SILTY CLAYEY SAND** fine to medium grained, low plasticity, brown
5			X	S	23		13	CH	firm to very firm	**SILTY CLAY** high plasticity, brown, with occasional sand lenses
10			X	S	47		15			
15			X	S	29		11			
20			X	S	37		11			trace sand lens
25			X	S	42		15			
30			■	T		105	16	CL	very firm to firm qu = 16.19 tsf	**SILTY CLAY** medium to high plasticity, brown
35				U	33		10			
40			X	S	22		6	SP		**SAND** trace iron oxide, nonplastic, brown
45				U	52		5			
50										

GROUNDWATER

DEPTH	HOUR	DATE
73.0	13:35	7/1/2013

SAMPLE TYPE
A-Auger cuttings; NR-No Recovery
BS-Bulk Sample.
S-2" O.D. 1.38" I.D. tube sample.
U-3" O.D. 2.42" I.D. tube sample.
T-3" O.D. thin-walled Shelby tube.
G-Grab Sample

AMEC Environment & Infrastructure

GEOTECH_BH 13517-00038.RIO PUERCO BRIDGE REPLACEMENT.GPJ GINT STD US JANNEY.GDT 7/26/13

AMANDA J. WHITE
NEW MEXICO
19215
PROFESSIONAL ENGINEER
10/7/16

NO.	DESCRIPTION	DATE	BY
3			
2			
1			

REVISIONS

NEW MEXICO DEPARTMENT
OF TRANSPORTATION

CITY OF GALLUP
ALLISON ROAD
BRIDGE OVER RIO PUERCO
BRIDGE NO. 9718

BORING LOGS
SHEET 2 OF 5

DESIGNED BY: AJW DRAWN BY: LSM CHECKED BY: SMM

DESIGNED BY: BOHANNAN HUSTON INC. PHONE: 505-823-1000 EMAIL:

Bohannan Huston
www.bhinc.com 800.877.5332

DESIGNED BY: AJW DRAWN BY: LSM CHECKED BY: SMM

PROJECT Rio Puerco Bridge Replacement
Allison Road in Gallup, New Mexico
DATE 6/24/13
AMEC PROJECT NO. 13-517-00038

Page 2 of 3
BORING NO. B-3

LOCATION See Site Plan
RIG TYPE CME-75
BORING TYPE 8" HSA
SURFACE ELEV.
DATUM

Depth in Feet	Continuous Penetration Resistance	Graphical Log	Sample	Sample Type	Blows/ft. 140 lb. 30" free-fall drop hammer	Dry Density lbs. per cubic foot	Moisture Content Percent of Dry Weight	Unified Soil Classification	REMARKS	VISUAL CLASSIFICATION
50				S	31		21	CH	very firm to firm	**SILTY CLAY** trace iron oxide staining, medium to high plasticity, olive green note: occasional zones of medium plasticity clay
55				U	47		15			
60				T		100	24		qu = 4.41 tsf	
65				S	19		21			
70				S	19		28			
75				S	12		21			sand layer approximately 1' thick
80				S	20			CH	moderately firm to firm	**FAT CLAY** trace organics, high plasticity, olive green with gray
85				S	16					
90				S	15					
95				S	20					
100										

GEOTECH_BH 13517-00038 RIO PUERCO BRIDGE REPLACEMENT.GPJ GINT STD US JANNEY.GDT 7/26/13

GROUNDWATER

DEPTH	HOUR	DATE
73.0	13:35	7/1/2013

SAMPLE TYPE
A-Auger cuttings; NR-No Recovery
BS-Bulk Sample.
S-2" O.D. 1.38" I.D. tube sample.
U-3" O.D. 2.42" I.D. tube sample.
T-3" O.D. thin-walled Shelby tube.
G-Grab Sample

AMEC Environment & Infrastructure

PROJECT Rio Puerco Bridge Replacement
Allison Road in Gallup, New Mexico
DATE 6/24/13
AMEC PROJECT NO. 13-517-00038

Page 3 of 3
BORING NO. B-3

LOCATION See Site Plan
RIG TYPE CME-75
BORING TYPE 8" HSA
SURFACE ELEV.
DATUM

Depth in Feet	Continuous Penetration Resistance	Graphical Log	Sample	Sample Type	Blows/ft. 140 lb. 30" free-fall drop hammer	Dry Density lbs. per cubic foot	Moisture Content Percent of Dry Weight	Unified Soil Classification	REMARKS	VISUAL CLASSIFICATION
100				S	10			CH	moderately firm	**FAT CLAY** high plasticity, olive green with dark gray
105				S	11					trace organics
								SP		**SAND** nonplastic, reddish-purple
110				S	21			CH	firm	**FAT CLAY** high plasticity, dark green
										Stopped auger @ 110' Stopped sampler @ 111.5 Hole Caved to 70'
115										
120										
125										
130										
135										
140										
145										
150										

GEOTECH_BH 13517-00038 RIO PUERCO BRIDGE REPLACEMENT.GPJ GINT STD US JANNEY.GDT 7/26/13

GROUNDWATER

DEPTH	HOUR	DATE
73.0	13:35	7/1/2013

SAMPLE TYPE
A-Auger cuttings; NR-No Recovery
BS-Bulk Sample.
S-2" O.D. 1.38" I.D. tube sample.
U-3" O.D. 2.42" I.D. tube sample.
T-3" O.D. thin-walled Shelby tube.
G-Grab Sample

AMEC Environment & Infrastructure

AMANDA J. WHITE
NEW MEXICO
19215
PROFESSIONAL ENGINEER
10/7/16

NO.	DESCRIPTION	DATE	BY
3			
2			
1			

REVISIONS

NEW MEXICO DEPARTMENT OF TRANSPORTATION

CITY OF GALLUP
ALLISON ROAD
BRIDGE OVER RIO PUERCO
BRIDGE NO. 9718

BORING LOGS
SHEET 3 OF 5

DESIGNED BY: BOHANNAN HUSTON INC. PHONE: 505-823-1000 EMAIL:

Bohannan Huston
www.bhinc.com 800.877.5332

DESIGNED BY: AJW DRAWN BY: LSM CHECKED BY: SMM

PROJECT Rio Puerco Bridge Replacement
Allison Road in Gallup, New Mexico
DATE 6/25/13
AMEC PROJECT NO. 13-517-00038

Page 1 of 2
BORING NO. B-4

LOCATION See Site Plan
RIG TYPE CME-75
BORING TYPE 8" HSA
SURFACE ELEV.
DATUM

Depth in Feet	Continuous Penetration Resistance	Graphical Log	Sample	Sample Type	Blows/ft 140 lb. 30" free-fall drop hammer	Dry Density lbs. per cubic foot	Moisture Content Percent of Dry Weight	Unified Soil Classification	REMARKS	VISUAL CLASSIFICATION
0				S	10		7	SM-SC	moderately firm to firm	**SILTY CLAYEY SAND** fine grained, trace clay lenses, nonplastic to low plasticity, light brown
				S	20		5			
5				S	20		11			
								CH	firm to hard	**SILTY CLAY** high plasticity, brown
				S	26		12			
10				S	34		13			trace sand lens
15				S	39		17			
20				U	30	102	10			note: occasional zones of medium plasticity clay
25				S	51		15			color change olive green
30				U	50/5.5"		17			
35				T						
								SP	dense	**SAND** nonplastic, brown
40				S	45					
45				U			4			
								CH		**SILTY CLAY** high plasticity, olive green
50										

GROUNDWATER

DEPTH	HOUR	DATE
none		

SAMPLE TYPE
A-Auger cuttings; NR-No Recovery
BS-Bulk Sample.
S-2" O.D. 1.38" I.D. tube sample.
U-3" O.D. 2.42" I.D. tube sample.
T-3" O.D. thin-walled Shelby tube.
G-Grab Sample

AMEC Environment & Infrastructure

GEOTECH_BH 13517-00038 RIO PUERCO BRIDGE REPLACEMENT.GPJ GINT STD US JANNEY.GDT 7/29/13

PROJECT Rio Puerco Bridge Replacement
Allison Road in Gallup, New Mexico
DATE 6/25/13
AMEC PROJECT NO. 13-517-00038

Page 2 of 2
BORING NO. B-4

LOCATION See Site Plan
RIG TYPE CME-75
BORING TYPE 8" HSA
SURFACE ELEV.
DATUM

Depth in Feet	Continuous Penetration Resistance	Graphical Log	Sample	Sample Type	Blows/ft 140 lb. 30" free-fall drop hammer	Dry Density lbs. per cubic foot	Moisture Content Percent of Dry Weight	Unified Soil Classification	REMARKS	VISUAL CLASSIFICATION
50				S	49		18	CH	very firm	**SILTY CLAY** high plasticity, olive green
55				T		98	20		qu = 9.67 tsf	
60				S	29		8	CL	firm	**SANDY CLAY** low plasticity, light brown
65				S	14		21	CH	moderately firm to firm	**SILTY CLAY** high plasticity, olive green
70				S	19		27			
										Stopped auger @ 70' Stopped sampler @ 71.5'
75										hole caved to 53'
80										
85										
90										
95										
100										

GROUNDWATER

DEPTH	HOUR	DATE
none		

SAMPLE TYPE
A-Auger cuttings; NR-No Recovery
BS-Bulk Sample.
S-2" O.D. 1.38" I.D. tube sample.
U-3" O.D. 2.42" I.D. tube sample.
T-3" O.D. thin-walled Shelby tube.
G-Grab Sample

AMEC Environment & Infrastructure

GEOTECH_BH 13517-00038 RIO PUERCO BRIDGE REPLACEMENT.GPJ GINT STD US JANNEY.GDT 7/29/13

AMANDA J. WHITE
NEW MEXICO
19215
PROFESSIONAL ENGINEER
10/7/16

NO.	DESCRIPTION	DATE	BY
3			
2			
1			

REVISIONS

NEW MEXICO DEPARTMENT OF TRANSPORTATION

CITY OF GALLUP
ALLISON ROAD
BRIDGE OVER RIO PUERCO
BRIDGE NO. 9718

BORING LOGS
SHEET 4 OF 5

DESIGNED BY: BOHANNAN HUSTON INC. PHONE: 505-823-1000 EMAIL:

Bohannan Huston
www.bhinc.com 800.877.5332

PROJECT Rio Puerco Bridge Replacement
Allison Road in Gallup, New Mexico
DATE 6/24/13
AMEC PROJECT NO. 13-517-00038

Page 1 **of** 1
BORING NO. B-5

LOCATION See Site Plan
RIG TYPE CME-75
BORING TYPE 8" HSA
SURFACE ELEV.
DATUM

Depth in Feet	Continuous Penetration Resistance	Graphical Log	Sample	Sample Type	Blows/ft. 140 lb. 30" free-fall drop hammer	Dry Density lbs. per cubic foot	Moisture Content Percent of Dry Weight	Unified Soil Classification	REMARKS	VISUAL CLASSIFICATION
0			X	S	9		8	SM	loose	**SILTY SAND** fine grained, nonplastic, brown
								CH	moderately firm to hard	**SILTY CLAY** high plasticity, brown
			X	S	12		7			
5			X	S	55		17			
			X	S	40		15			trace calcium carbonate
10			X	S	62		15			
15				U	38		16			
20			X	S	45		14			
25				U	42					
								SP		**SAND** fine to medium grained, nonplastic, brown
30			X	S	15					
35				U	44					
40			X	S	23					
										Stopped auger @ 40' Stopped sampler @ 41.5' hole caved to 33'
45										
50										

GEOTECH_BH 13517-00038 RIO PUERCO BRIDGE REPLACEMENT.GPJ GINT STD US JANNEY.GDT 7/29/13

GROUNDWATER

DEPTH	HOUR	DATE
none		

SAMPLE TYPE
A-Auger cuttings; NR-No Recovery
BS-Bulk Sample.
S-2" O.D. 1.38" I.D. tube sample.
U-3" O.D. 2.42" I.D. tube sample.
T-3" O.D. thin-walled Shelby tube.
G-Grab Sample

AMEC Environment & Infrastructure

AMANDA J. WHITE
NEW MEXICO
19215
PROFESSIONAL ENGINEER
10/7/16

CAD

NO.	DESCRIPTION	DATE	BY
3			
2			
1			

REVISIONS

NEW MEXICO DEPARTMENT
OF TRANSPORTATION

CITY OF GALLUP
ALLISON ROAD
BRIDGE OVER RIO PUERCO
BRIDGE NO. 9718

BORING LOGS
SHEET 5 OF 5

DESIGNED BY: BOHANNAN HUSTON INC. PHONE: 505-823-1000 EMAIL:
DESIGNED BY: AJW DRAWN BY: LSM CHECKED BY: SMM

Bohannan Huston
www.bhinc.com 800.877.5332

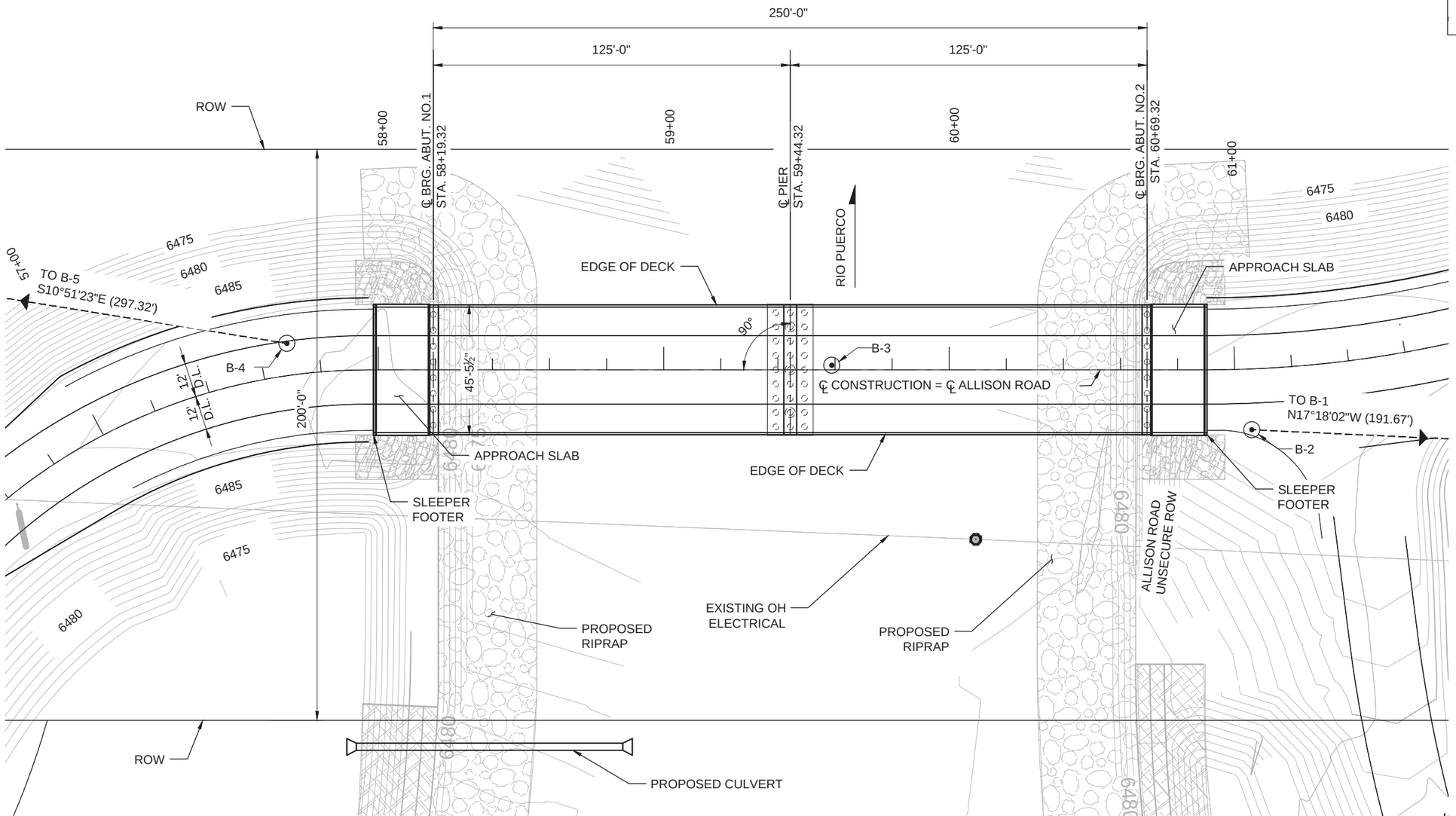

LOCATION PLAN

SCALE: 1:40

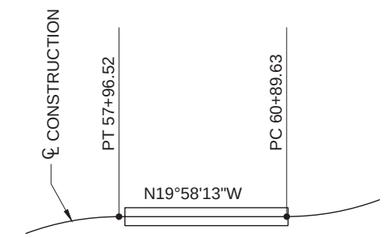

HORIZONTAL DATA

LEGEND

B-X INDICATES BORE HOLE LOCATION

NOTES

1. SEE SHEETS 5-5 THRU 5-9 FOR BORING LOG DATA SHEETS.
2. THE BORE HOLE LOCATIONS SHOWN ARE TAKEN DIRECTLY FROM GEOTECHNICAL REPORTS.

AMANDA J. WHITE
NEW MEXICO
19215
PROFESSIONAL ENGINEER
10/7/16

NO.	DESCRIPTION	DATE	BY
3			
2			
1			

REVISIONS

NEW MEXICO DEPARTMENT OF TRANSPORTATION

CITY OF GALLUP
ALLISON ROAD
BRIDGE OVER RIO PUERCO
BRIDGE NO. 9718

BRIDGE LOCATION PLAN

DESIGNED BY: AJW DRAWN BY: LSM CHECKED BY: SMM
DESIGNED BY: BOHANNAN HUSTON INC. PHONE: 505-823-1000 EMAIL:

PROJECT CONTROL NUMBER: 6100112

Bohannan Huston
www.bhinc.com 800.877.5332

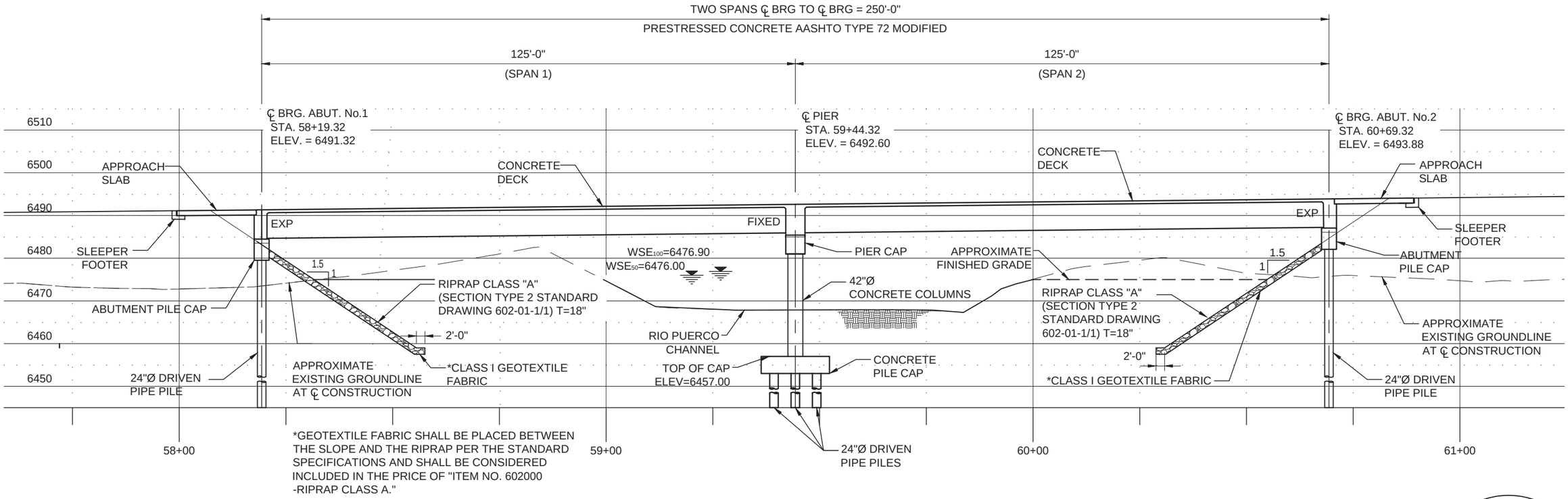

*GEOTEXTILE FABRIC SHALL BE PLACED BETWEEN THE SLOPE AND THE RIPRAP PER THE STANDARD SPECIFICATIONS AND SHALL BE CONSIDERED INCLUDED IN THE PRICE OF "ITEM NO. 602000 -RIPRAP CLASS A."

BRIDGE PROFILE

ALONG ℄ CONSTRUCTION SCALE: 1/2" = 1'-0"

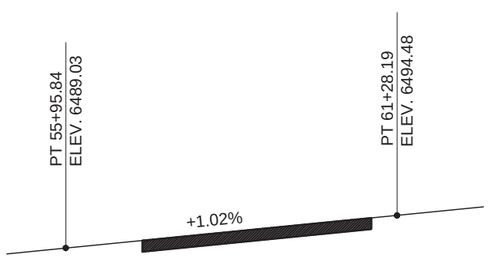

PROFILE GRADE DATA

ALONG ℄ CONSTRUCTION

NOTE: SEE PROJECT SPECIAL PROVISION FOR DEWATERING AND RIVER DIVERSION REQUIREMENTS FOR CONSTRUCTION OF DRIVEN PILES AND BANK PROTECTION.

WATERWAY DATA
50 AND 100 YEAR EVENTS

Q_{50}	=	17,000 cfs
V_{50}	=	7.23 fps
H_{50}	=	6476.00 ft
Q_{100}	=	20,000 cfs
V_{100}	=	6.75 fps
H_{100}	=	6476.90 ft

EXPECTED SCOUR DEPTH AT PIER = 9.0 ft

AMANDA J. WHITE
NEW MEXICO
19215
PROFESSIONAL ENGINEER
10/7/16

NO.	DESCRIPTION	DATE	BY
3			
2			
1			

REVISIONS

NEW MEXICO DEPARTMENT OF TRANSPORTATION

CITY OF GALLUP
ALLISON ROAD
BRIDGE OVER RIO PUERCO
BRIDGE NO. 9718

BRIDGE PROFILE

DESIGNED BY: AJW DRAWN BY: LSM CHECKED BY: SMM
DESIGNED BY: BOHANNAN HUSTON INC. PHONE: 505-823-1000 EMAIL:

10/7/2016 6:13 PM P:\20160123\STRUCT\Drawings\ACAD\20100245_RP11_PROFILE.dwg Amanda White

SHEET NO. 5-11

Bohannan Huston
www.bhinc.com 800.877.5332

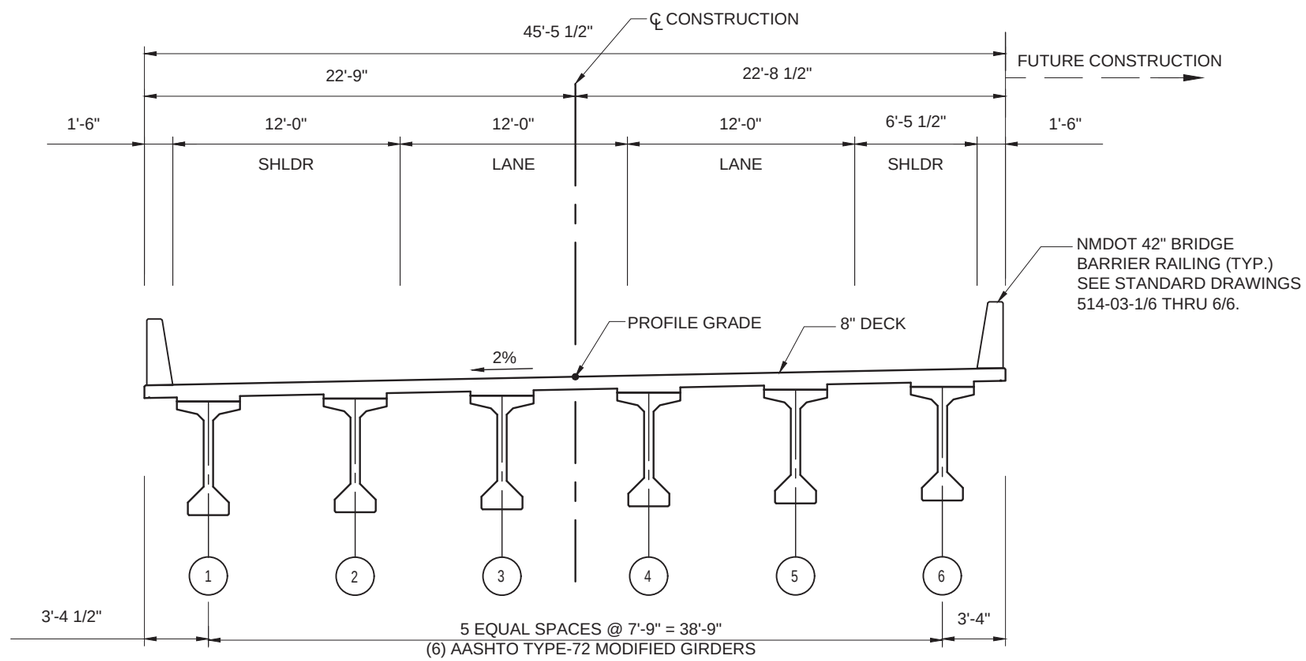

TRANSVERSE SECTION

SCALE: 1/8" = 1'-0"

AMANDA J. WHITE
NEW MEXICO
19215
PROFESSIONAL ENGINEER
10/7/16

NO.	DESCRIPTION	DATE	BY
3			
2			
1			

REVISIONS

NEW MEXICO DEPARTMENT
OF TRANSPORTATION

CITY OF GALLUP
ALLISON ROAD
BRIDGE OVER RIO PUERCO
BRIDGE NO. 9718

TRANSVERSE SECTION

DESIGNED BY: AJW DRAWN BY: LSM CHECKED BY: SMM
DESIGNED BY: BOHANNAN HUSTON INC. PHONE: 505-823-1000 EMAIL:

Bohannan Huston
www.bhinc.com 800.877.5332

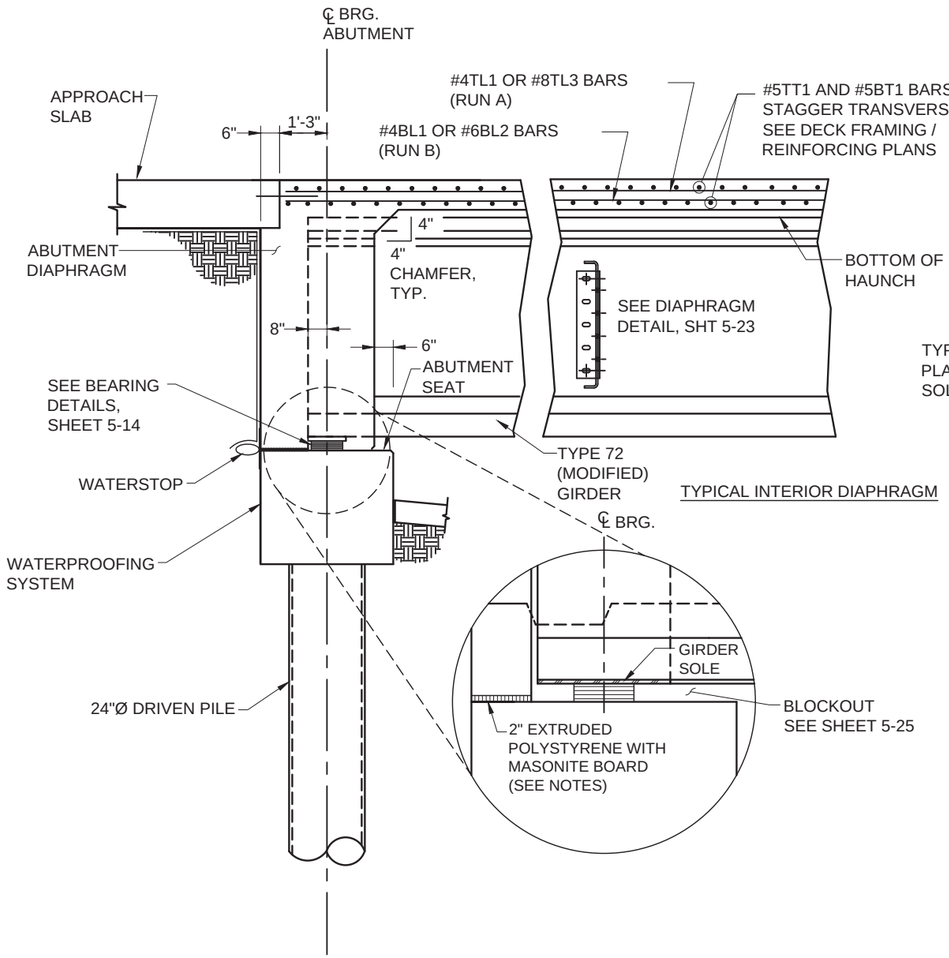

TYPICAL INTERIOR DIAPHRAGM

TYPICAL ABUTMENT AT GIRDER

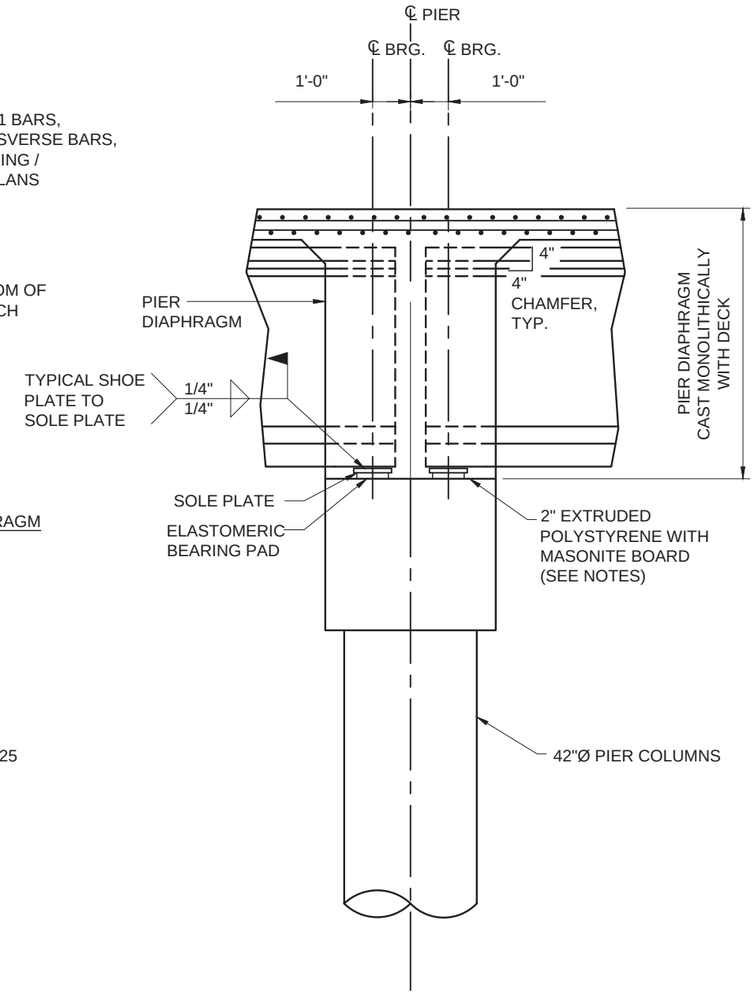

TYPICAL PIER

NOTES:

1. ALL JOINTS IN POLYSTYRENE SHALL BE SEALED WITH TAPE, TYP.

2. THE EXTRUDED POLYSTYRENE SHALL HAVE A COMPRESSIVE STRENGTH OF 25 PSI. THE MASONITE BOARD SHALL COVER THE HORIZONTAL SURFACES OF THE EXTRUDED POLYSTYRENE. THE EXTRUDED POLYSTYRENE AND MASONITE BOARD IS INCIDENTAL TO THE COMPLETION OF THE PROJECT.

3. IN LOCATIONS WHERE THE EXTRUDED POLYSTYRENE IS BEING USED TO SUPPORT THE REBAR, THE REBAR CHAIRS SHALL HAVE A SAND PLATE ATTACHED TO THE CHAIR.

LONGITUDINAL SECTION

AMANDA J. WHITE
NEW MEXICO
19215
PROFESSIONAL ENGINEER
10/7/16

NO.	DESCRIPTION	DATE	BY
3			
2			
1			

REVISIONS

NEW MEXICO DEPARTMENT OF TRANSPORTATION

CITY OF GALLUP
ALLISON ROAD
BRIDGE OVER RIO PUERCO
BRIDGE NO. 9718

LONGITUDINAL SECTION

DESIGNED BY: AJW DRAWN BY: LSM CHECKED BY: SMM
DESIGNED BY: BOHANNAN HUSTON INC. PHONE: 505-823-1000 EMAIL:

Bohannan Huston
www.bhinc.com 800.877.5332

LOCATION	BEARING PAD INFORMATION TABLE - 60 DUROMETER													SOLE PLATE INFORMATION TABLE					
	NO. LAMS		NO. SHIMS	LAM THKN		TOTAL THKN	△ (DL)	DESIGN DL	DESIGN LL	L	W	MOVEMENT LENGTH	NO. REQ'D	X	Y	T1	T2	T3	NO. REQ'D
	EXT.	INT.		EXT.	INT.														
ABUT. 1	2	7	8	1/4	1/2	5	1/8	141	95	16	16	1.86	6	28	19	3/4	7/8	1	6
ABUT. 2	2	7	8	1/4	1/2	5	1/8	141	95	16	16	1.86	6	28	19	3/4	7/8	1	6
PIER	2	3	4	1/4	1/2	2.5	1/8	141	113	16	16	0	12	28	19	3/4	7/8	1	12
				INCHES				KIPS		INCHES		INCHES		INCHES					

△ (DL) = INSTANTANEOUS DEFORMATION OF PAD UNDER NON-COMPOSITE DEAD LOAD

ELASTOMERIC BEARING PAD

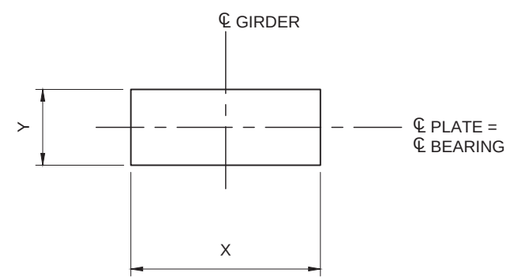

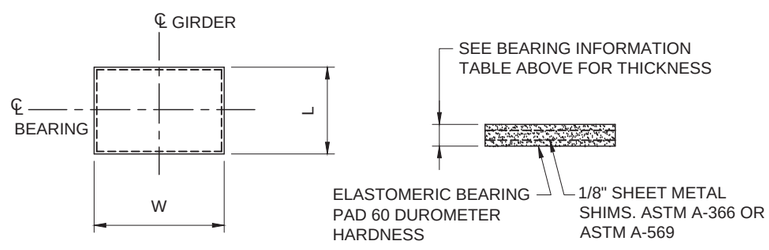

ELASTOMERIC BEARING PAD

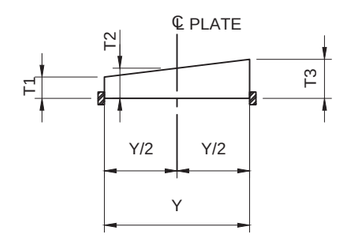

NOTE: THICKEST PORTION OF SOLE PLATE (T3) IS ALWAYS PLACED UPSTATION OF CENTERLINE OF BEARING, SEE TABLE FOR DIMENSIONS.

SOLE PLATE DETAIL

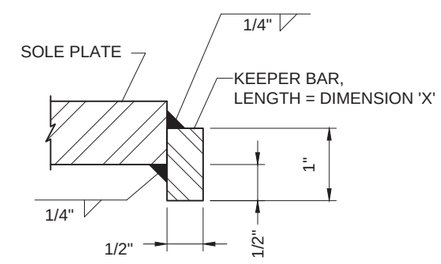

DETAIL 'A' KEEPER BAR

NO.	DESCRIPTION	DATE	BY
3			
2			
1			

REVISIONS

NEW MEXICO DEPARTMENT OF TRANSPORTATION

CITY OF GALLUP
ALLISON ROAD
BRIDGE OVER RIO PUERCO
BRIDGE NO. 9718

BEARING DETAILS

DESIGNED BY: BOHANNAN HUSTON INC. PHONE: 505-823-1000 EMAIL:
DESIGNED BY: AJW DRAWN BY: LSM CHECKED BY: SMM

Bohannan Huston
www.bhinc.com 800.877.5332

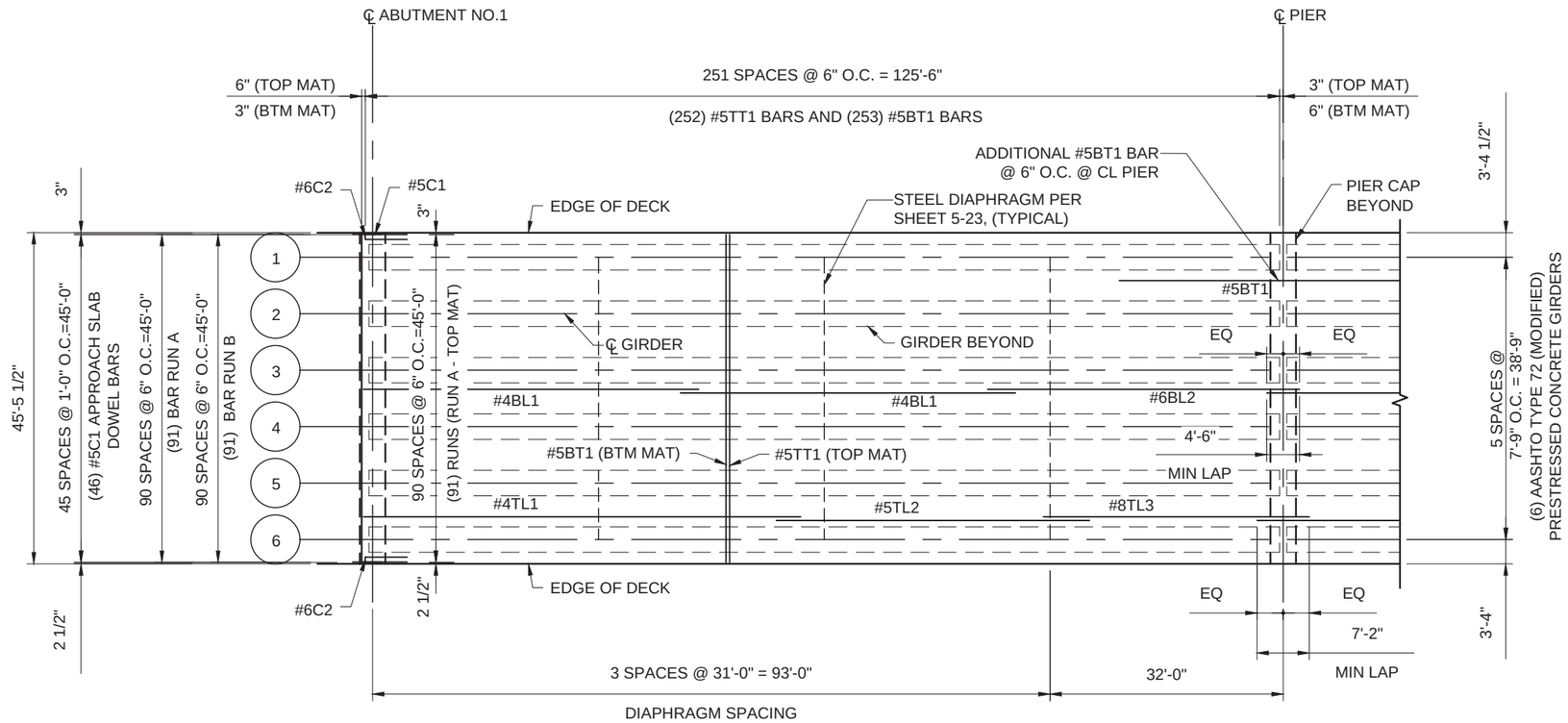

DECK PLAN - SPAN 1

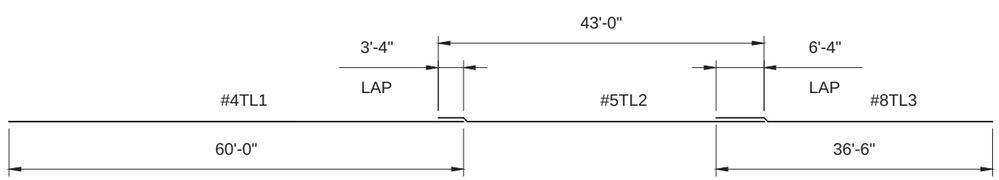

BAR RUN A

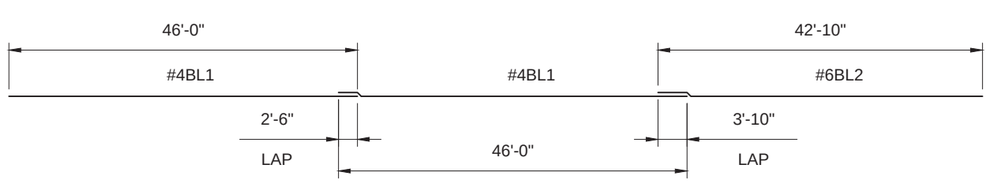

BAR RUN B

AMANDA J. WHITE
NEW MEXICO
19215
PROFESSIONAL ENGINEER
10/7/16

NO.	DESCRIPTION	DATE	BY
3			
2			
1			

REVISIONS

NEW MEXICO DEPARTMENT
OF TRANSPORTATION

CITY OF GALLUP
ALLISON ROAD
BRIDGE OVER RIO PUERCO
BRIDGE NO. 9718

DECK REINFORCING PLAN
SPAN 1

DESIGNED BY: AJW DRAWN BY: VKL CHECKED BY: SMM

DESIGNED BY: BOHANNAN HUSTON INC. PHONE: 505-823-1000 EMAIL:

Bohannan Huston
www.bhinc.com 800.877.5332

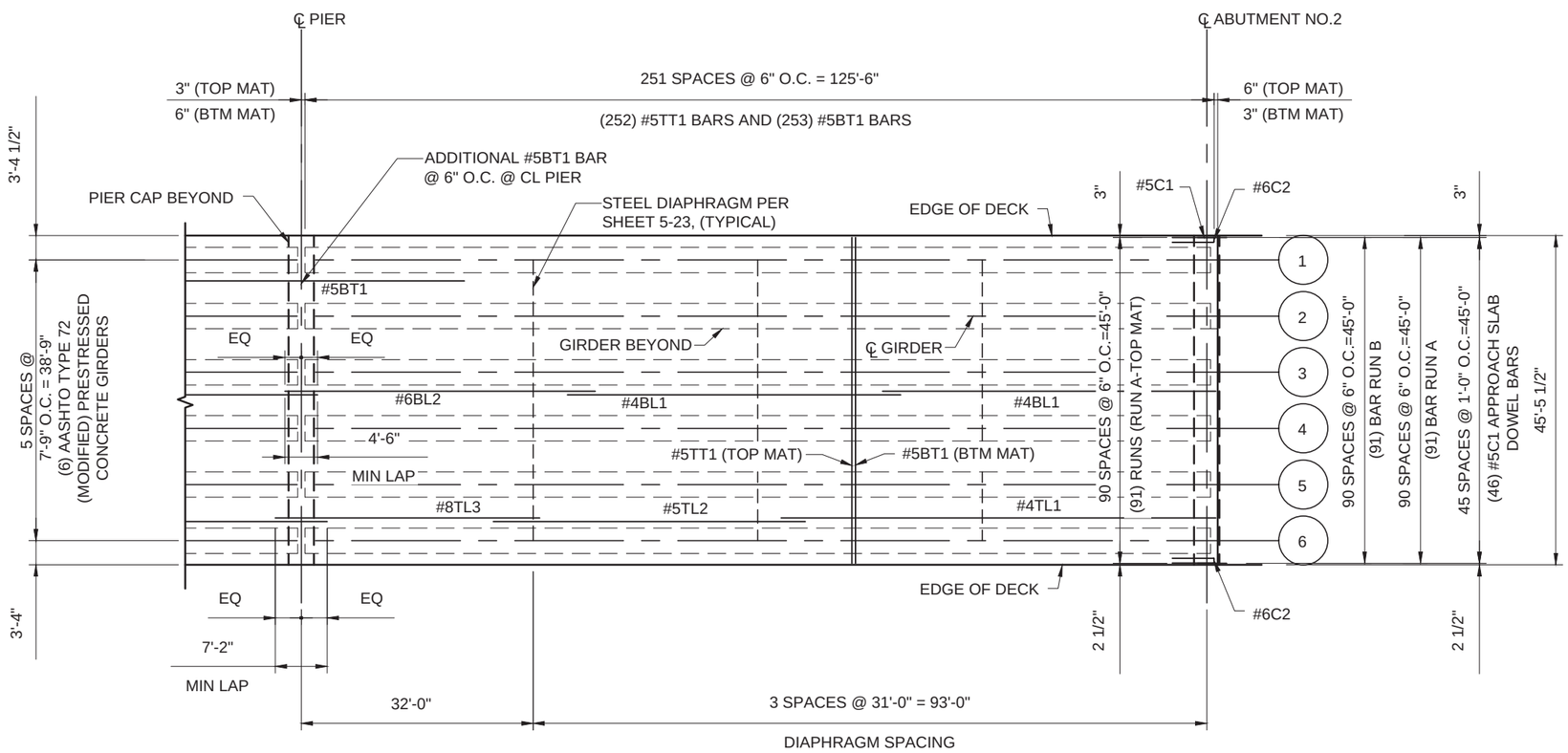

DECK PLAN - SPAN 2

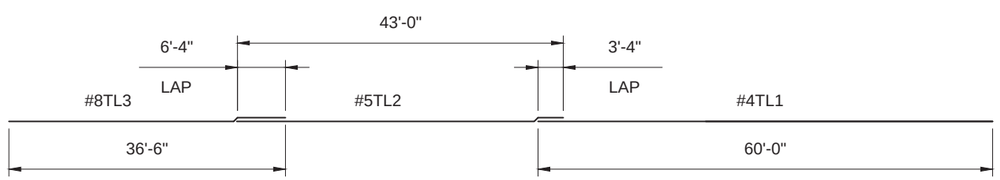

BAR RUN A

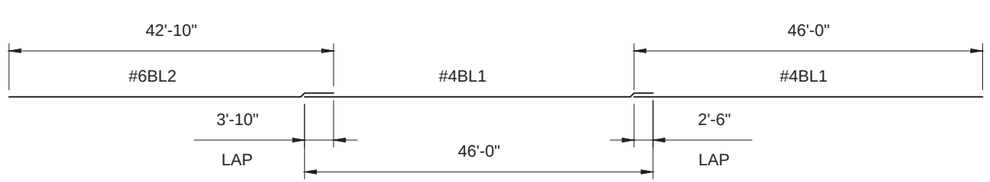

BAR RUN B

AMANDA J. WHITE
NEW MEXICO
19215
PROFESSIONAL ENGINEER
10/7/16

NO.	DESCRIPTION	DATE	BY
3			
2			
1			

REVISIONS

NEW MEXICO DEPARTMENT
OF TRANSPORTATION

CITY OF GALLUP
ALLISON ROAD
BRIDGE OVER RIO PUERCO
BRIDGE NO. 9718

DECK REINFORCING PLAN
SPAN 2

DESIGNED BY: BOHANNAN HUSTON INC. PHONE: 505-823-1000 EMAIL:
DESIGNED BY: AJW DRAWN BY: VKL CHECKED BY: SMM

Bohannan Huston
www.bhinc.com 800.877.5332

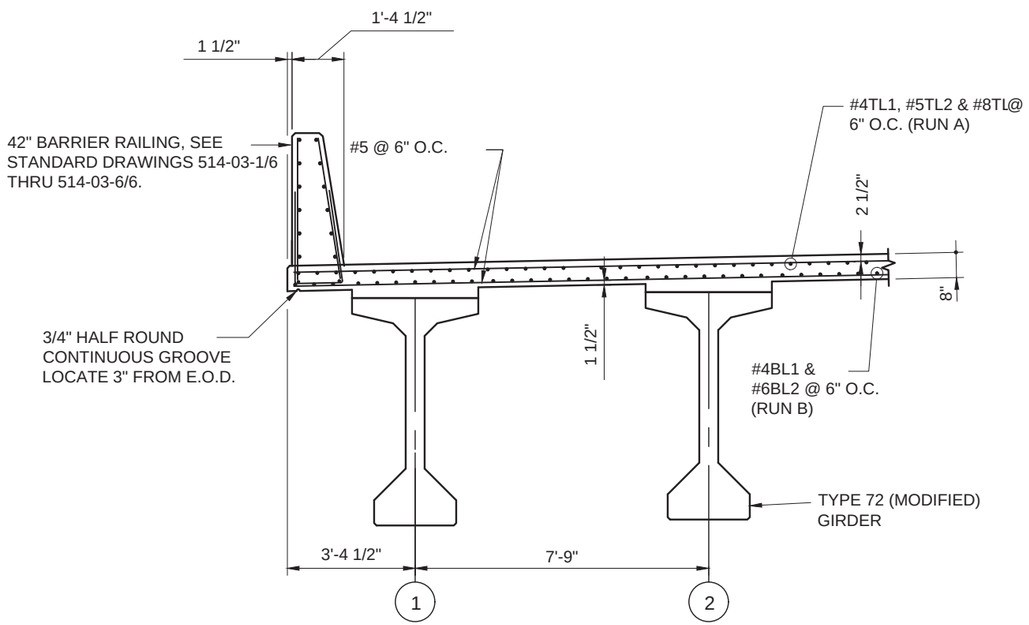

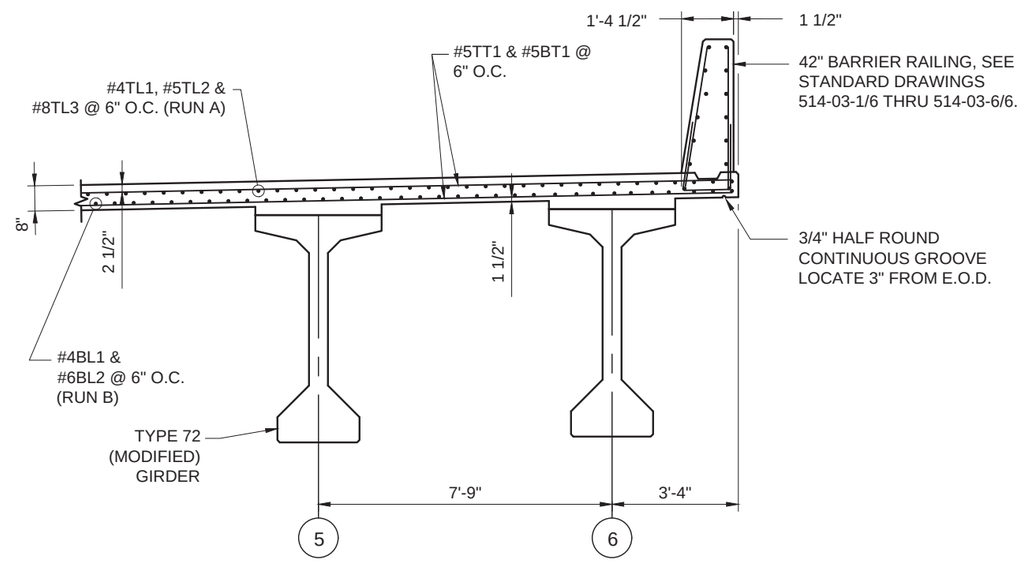

DECK SLAB DETAILS

NOTE:
1. COORDINATE LOCATIONS OF CONTRACTION JOINTS IN BOTH THE SIDEWALK AND THE 42" BARRIER RAILING.

SCHEDULE OF REINFORCING STEEL FOR DECK AND SIDEWALK

MARK	SIZE	LENGTH		NO REQ'D	BEND DIAGRAM	REMARKS
		FEET	INCHES			
#4BL1 *	# 4	46	0	364	1	
#6BL2 *	# 6	42	10	182	1	
#4TL1 *	# 4	60	0	182	1	
#5TL2 *	# 5	43	0	182	1	
#8TL3 *	# 8	36	6	182	1	
#5BT1 *	# 5	45	0	596	1	
#5TT1 *	# 5	45	0	504	1	
#5C1 *	# 5	5	6	92	1	
#6C2 *	# 6	12	2	4	3	A = 5'-9", B = 8"

* DENOTES EPOXY COATED BAR

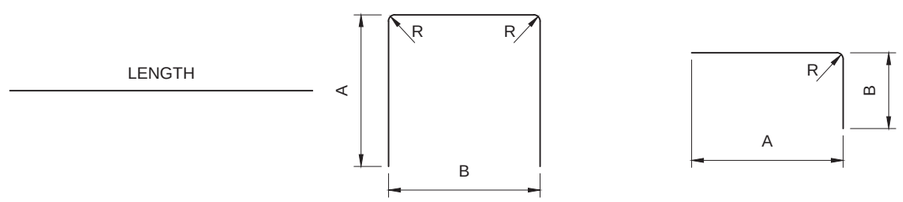

TYPE 1 TYPE 3 TYPE 4

BAR SIZE	USE	MIMIMUM 'R'
#4 & #5	GENERAL	6.0 d_b
#4 & #5	STIRRUPS AND TIES	4.0 d_b
#6 THRU #8	GENERAL	6.0 d_b
#9 THRU #11	GENERAL	8.0 d_b

d_b = BAR DIAMETER

AMANDA J. WHITE
NEW MEXICO
19215
PROFESSIONAL ENGINEER
10/7/16

NO.	DESCRIPTION	DATE	BY
3			
2			
1			

REVISIONS

NEW MEXICO DEPARTMENT OF TRANSPORTATION

CITY OF GALLUP
ALLISON ROAD
BRIDGE OVER RIO PUERCO
BRIDGE NO. 9718

DECK DETAILS
SHEET 1 OF 2

DESIGNED BY: BOHANNAN HUSTON INC. PHONE: 505-823-1000 EMAIL:
DESIGNED BY: AJW DRAWN BY: VKL CHECKED BY: GEL

Bohannan Huston
www.bhinc.com 800.877.5332

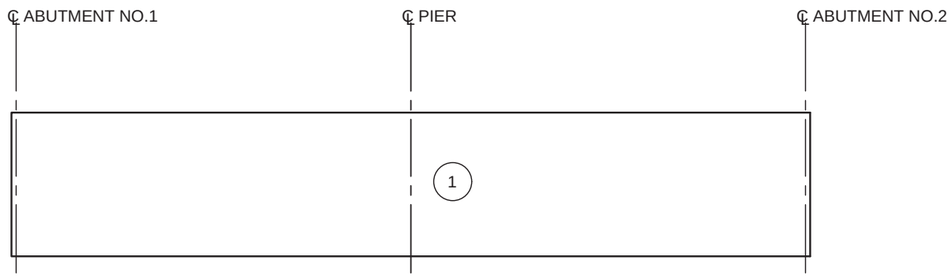

CONCRETE DECK PLACEMENT DETAIL

NOTES:

1. CONCRETE SHALL BE PLACED THE FULL WIDTH OF THE DECK SLAB AT A FORWARD RATE OF PROGRESS OF NOT LESS THAN 30 FEET PER HOUR.
2. SET RETARDANT SHALL NOT BE USED IF THE ATMOSPHERIC TEMPERATURE AT THE TIME OF PLACEMENT IS LESS THAN 60° F.
3. DECK SLABS ARE PERMITTED TO BE PLACED CONTINUOUSLY AS SHOWN IN THE SEQUENCE TO THE LEFT PROVIDED A SECOND BACKUP CONCRETE PUMP IS AVAILABLE ON THE JOB SITE.
4. CONTRACTOR SHALL SUBMIT A DECK PLACEMENT PROCEDURE TO THE ENGINEER FOR APPROVAL. APPROVAL SHALL BE OBTAINED PRIOR TO PLACING DECK CONCRETE.

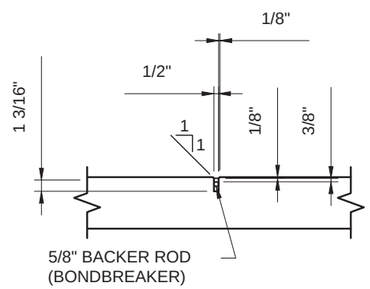

THE SILICONE SEALED JOINTS SHALL BE CONSTRUCTED IN ACCORDANCE WITH THE STANDARD SPECIFICATIONS SECTION 452 - SEALING AND RESEALING. THE SEALED JOINTS SHALL BE INCIDENTAL TO "ITEM No. 512003- HIGH PERFORMANCE CONCRETE (HPD)."

SEALED CONTRACTION JOINT DETAIL

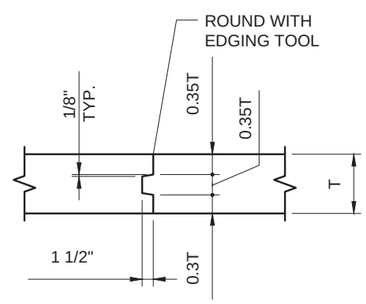

REINFORCEMENT BARS ARE CONTINUOUS THROUGH JOINT. NOT SHOWN FOR CLARITY.

CONSTRUCTION JOINT DETAIL

AMANDA J. WHITE
NEW MEXICO
19215
PROFESSIONAL ENGINEER
10/7/16

NO.	DESCRIPTION	DATE	BY
3			
2			
1			

REVISIONS

NEW MEXICO DEPARTMENT OF TRANSPORTATION

CITY OF GALLUP
ALLISON ROAD
BRIDGE OVER RIO PUERCO
BRIDGE NO. 9718

DECK DETAILS
SHEET 2 OF 2

DESIGNED BY: BOHANNAN HUSTON INC. PHONE: 505-823-1000 EMAIL:
DESIGNED BY: AJW DRAWN BY: VKL CHECKED BY: GEL

Bohannan Huston
www.bhinc.com 800.877.5332

TOP OF SLAB ELEVATIONS

SPAN 1											
	A	B	C	D	E	F	G	H	I	J	K
LT E.O.D	6490.863	6490.990	6491.117	6491.244	6491.371	6491.497	6491.624	6491.751	6491.878	6492.005	6492.132
1	6490.930	6491.057	6491.184	6491.311	6491.438	6491.565	6491.692	6491.819	6491.946	6492.073	6492.200
2	6491.085	6491.212	6491.339	6491.466	6491.593	6491.720	6491.847	6491.974	6492.101	6492.228	6492.355
3	6491.240	6491.367	6491.494	6491.621	6491.748	6491.875	6492.002	6492.129	6492.256	6492.383	6492.510
P.G.	6491.318	6491.445	6491.572	6491.699	6491.826	6491.952	6492.079	6492.206	6492.333	6492.460	6492.587
4	6491.395	6491.522	6491.649	6491.776	6491.903	6492.030	6492.157	6492.284	6492.411	6492.538	6492.665
5	6491.550	6491.677	6491.804	6491.931	6492.058	6492.185	6492.312	6492.439	6492.566	6492.693	6492.820
6	6491.705	6491.832	6491.959	6492.086	6492.213	6492.340	6492.467	6492.594	6492.721	6492.848	6492.975
RT E.O.D.	6491.772	6491.899	6492.026	6492.153	6492.280	6492.407	6492.534	6492.661	6492.787	6492.914	6493.041
SPAN 2											
	A	B	C	D	E	F	G	H	I	J	K
LT E.O.D	6492.153	6492.280	6492.407	6492.533	6492.660	6492.787	6492.914	6493.041	6493.168	6493.295	6493.422
1	6492.220	6492.347	6492.474	6492.601	6492.728	6492.855	6492.982	6493.109	6493.236	6493.363	6493.490
2	6492.375	6492.502	6492.629	6492.756	6492.883	6493.010	6493.137	6493.264	6493.391	6493.518	6493.645
3	6492.530	6492.657	6492.784	6492.911	6493.038	6493.165	6493.292	6493.419	6493.546	6493.673	6493.800
P.G.	6492.608	6492.735	6492.862	6492.988	6493.115	6493.242	6493.369	6493.496	6493.623	6493.750	6493.877
4	6492.685	6492.812	6492.939	6493.066	6493.193	6493.320	6493.447	6493.574	6493.701	6493.828	6493.955
5	6492.840	6492.967	6493.094	6493.221	6493.348	6493.475	6493.602	6493.729	6493.856	6493.983	6494.110
6	6492.995	6493.122	6493.249	6493.376	6493.503	6493.630	6493.757	6493.884	6494.011	6494.138	6494.265
RT E.O.D.	6493.062	6493.189	6493.316	6493.443	6493.570	6493.696	6493.823	6493.950	6494.077	6494.204	6494.331

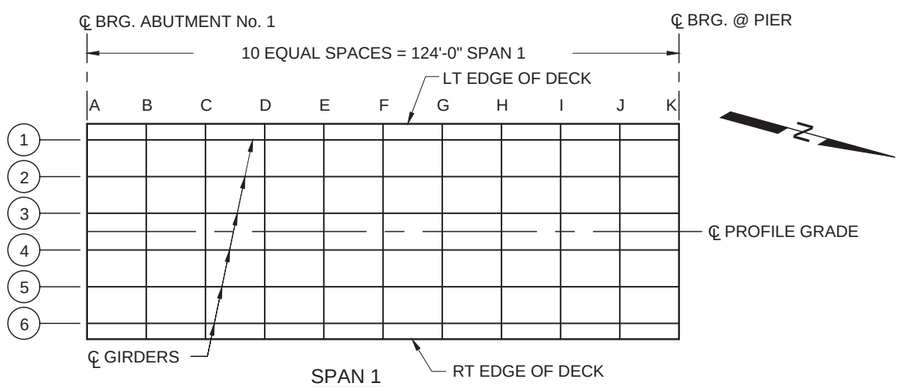

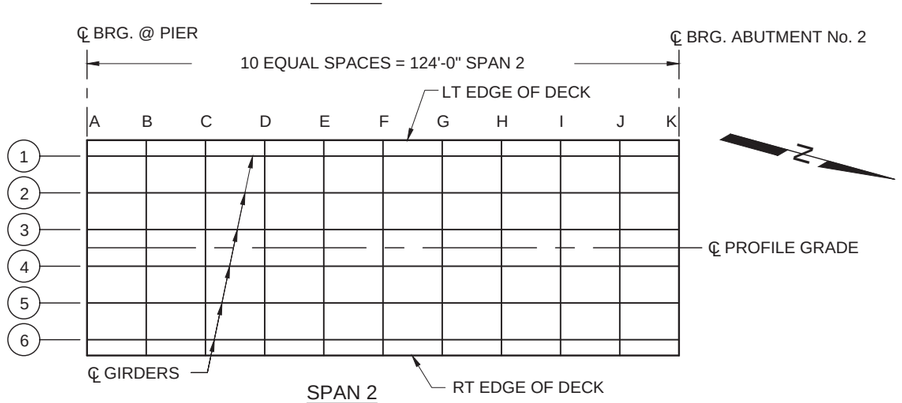

DIAGRAM FOR ELEVATIONS AT 10TH POINTS

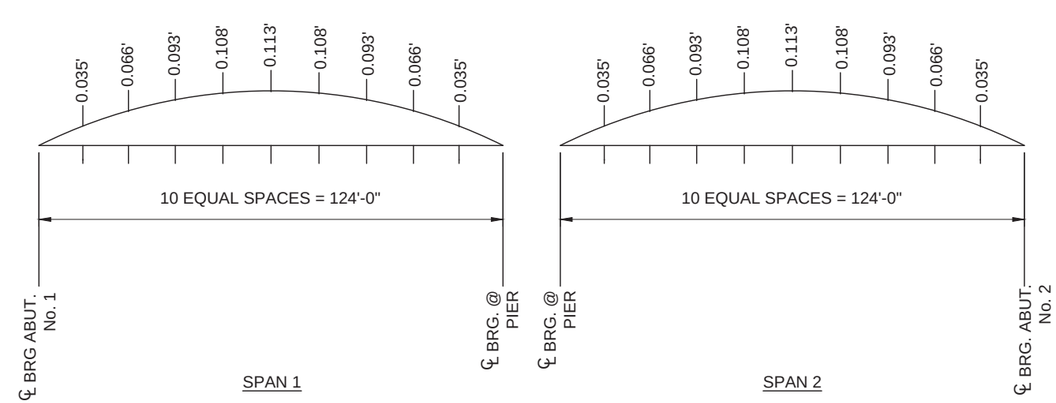

DEAD LOAD DEFLECTION DIAGRAM

NOTES:

1. TO COMPENSATE FOR DEAD LOAD DEFLECTION DUE TO WEIGHT OF SLAB AND SUPERIMPOSED DEAD LOAD. SET SCREEDS ABOVE DECK ELEVATIONS BY DIMENSION SHOWN IN DEAD LOAD DEFLECTION DIAGRAM. ALL DIMENSIONS SHOWN IN DEAD LOAD DEFLECTION DIAGRAM ARE IN FEET.
2. DECK ELEVATIONS SHOWN ARE AT 10TH POINTS OF SPANS.

AMANDA J. WHITE
NEW MEXICO
19215
PROFESSIONAL ENGINEER
10/7/16

NO.	DESCRIPTION	DATE	BY
3			
2			
1			

REVISIONS

NEW MEXICO DEPARTMENT OF TRANSPORTATION

CITY OF GALLUP
ALLISON ROAD
BRIDGE OVER RIO PUERCO
BRIDGE NO. 9718

TOP OF SLAB ELEVATIONS

DESIGNED BY: AJW DRAWN BY: VKL CHECKED BY: SMM
DESIGNED BY: BOHANNAN HUSTON INC. PHONE: 505-823-1000 EMAIL:

Bohannan Huston
www.bhinc.com 800.877.5332

SEAT ELEVATIONS

LOCATION	DESCRIPTION	GIRDER 1	2	3	4	5	6
ABUT. 1	SLAB ELEVATION	6490.930	6491.085	6491.240	6491.395	6491.550	6491.705
	SLAB THICKNESS	0.667	0.667	0.667	0.667	0.667	0.667
	HAUNCH	0.260	0.250	0.250	0.250	0.250	0.260
	GIRDER	6.000	6.000	6.000	6.000	6.000	6.000
	SOLE PLATE	0.073	0.073	0.073	0.073	0.073	0.073
	BEARING	0.417	0.417	0.417	0.417	0.417	0.417
	TOTAL "P"	7.416	7.406	7.406	7.406	7.406	7.416
	SEAT ELEVATION	6483.514	6483.679	6483.834	6483.989	6484.144	6484.289

LOCATION	DESCRIPTION	GIRDER 1	2	3	4	5	6
PIER SPAN 1 (DOWN STA)	SLAB ELEVATION	6492.200	6492.355	6492.510	6492.665	6492.820	6492.975
	SLAB THICKNESS	0.667	0.667	0.667	0.667	0.667	0.667
	HAUNCH	0.260	0.250	0.250	0.250	0.250	0.260
	GIRDER	6.000	6.000	6.000	6.000	6.000	6.000
	SOLE PLATE	0.073	0.073	0.073	0.073	0.073	0.073
	BEARING	0.208	0.208	0.208	0.208	0.208	0.208
	TOTAL "P"	7.208	7.198	7.198	7.198	7.198	7.208
	SEAT ELEVATION	6484.992	6485.157	6485.312	6485.467	6485.622	6485.767

LOCATION	DESCRIPTION	GIRDER 1	2	3	4	5	6
PIER SPAN 2 (UP STA)	SLAB ELEVATION	6492.220	6492.375	6492.530	6492.685	6492.840	6492.995
	SLAB THICKNESS	0.667	0.667	0.667	0.667	0.667	0.667
	HAUNCH	0.260	0.250	0.250	0.250	0.250	0.260
	GIRDER	6.000	6.000	6.000	6.000	6.000	6.000
	SOLE PLATE	0.073	0.073	0.073	0.073	0.073	0.073
	BEARING	0.208	0.208	0.208	0.208	0.208	0.208
	TOTAL "P"	7.208	7.198	7.198	7.198	7.198	7.208
	SEAT ELEVATION	6485.013	6485.177	6485.332	6485.487	6485.642	6485.788

LOCATION	DESCRIPTION	GIRDER 1	2	3	4	5	6
ABUT. 2	SLAB ELEVATION	6493.490	6493.645	6493.800	6493.955	6494.110	6494.265
	SLAB THICKNESS	0.667	0.667	0.667	0.667	0.667	0.667
	HAUNCH	0.260	0.250	0.250	0.250	0.250	0.260
	GIRDER	6.000	6.000	6.000	6.000	6.000	6.000
	SOLE PLATE	0.073	0.073	0.073	0.073	0.073	0.073
	BEARING	0.417	0.417	0.417	0.417	0.417	0.417
	TOTAL "P"	7.416	7.406	7.406	7.406	7.406	7.416
	SEAT ELEVATION	6486.074	6486.238	6486.393	6486.548	6486.703	6486.849

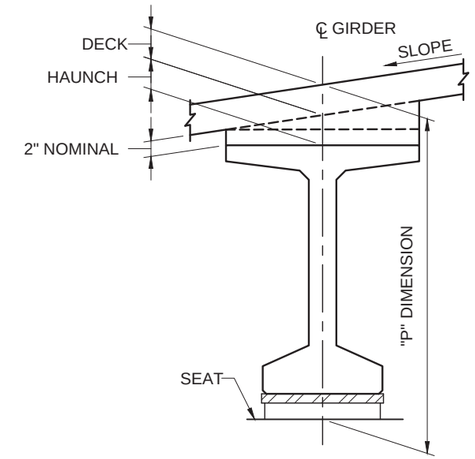

HAUNCH DIAGRAM

AMANDA J. WHITE
NEW MEXICO
19215
10/7/16
PROFESSIONAL ENGINEER

NO.	DESCRIPTION	DATE	BY
3			
2			
1			

REVISIONS

NEW MEXICO DEPARTMENT OF TRANSPORTATION

CITY OF GALLUP
ALLISON ROAD
BRIDGE OVER RIO PUERCO
BRIDGE NO. 9718

SEAT ELEVATION DETAILS

DESIGNED BY: AJW DRAWN BY: LSM CHECKED BY: SMM
DESIGNED BY: BOHANNAN HUSTON INC. PHONE: 505-823-1000 EMAIL:

Bohannan Huston
www.bhinc.com 800.877.5332

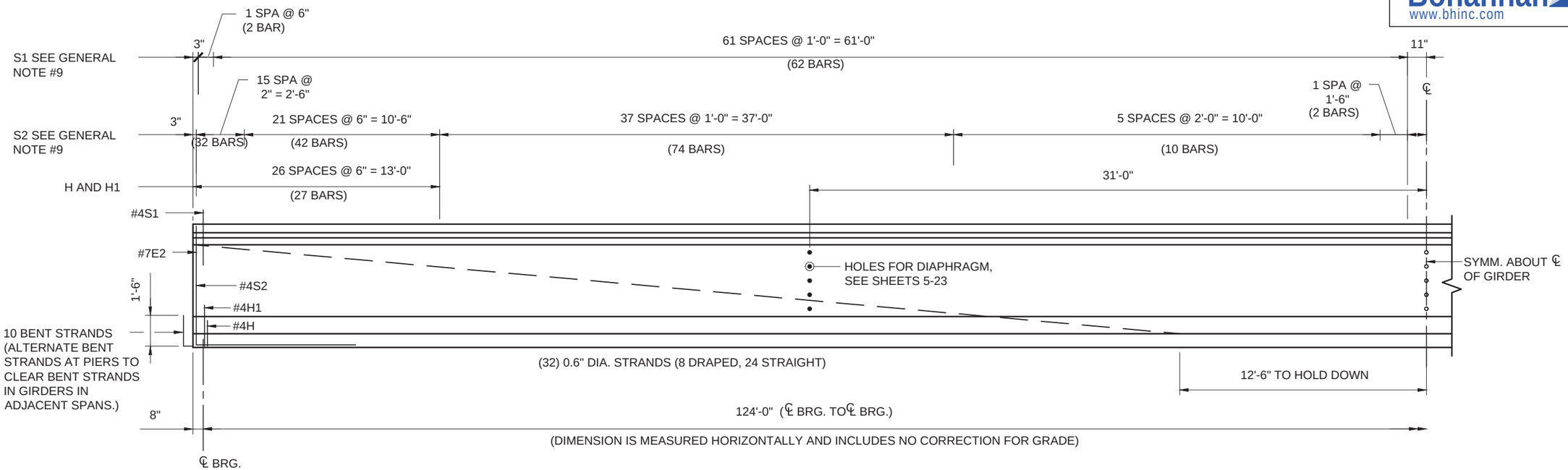

HALF ELEVATION TYPE 72 MODIFIED GIRDERS, 12 REQ'D

(fpe = 35,305 LBS. PER STRAND; LOSSES = 8,634 LBS PER STRAND)

GENERAL NOTES

1. COST OF REINFORCING BARS AND STRUCTURAL STEEL EMBEDDED IN BRIDGE GIRDERS IS TO BE INCLUDED IN THE UNIT PRICE BID FOR PRESTRESSED CONCRETE BRIDGE MEMBER TYPE 72 MODIFIED.
2. GIRDERS TO BE LIFTED BY MEANS OF DEVICES SATISFACTORY TO THE FABRICATOR. GIRDERS TO BE CAST, STORED, AND HAULED IN UPRIGHT POSITION. LIFTING DEVICES MUST BE APPROVED BY THE ENGINEER PRIOR TO USE.
3. THE TOP SURFACES OF THE GIRDERS ARE TO BE THOROUGHLY WIRE BRUSHED AND SCORED TRANSVERSELY AFTER INITIAL SET (MIN. DEPTH = 1/4" ACROSS ENTIRE FLANGE WIDTH).
4. THE CAMBER AT ERECTION DIMENSION LISTED (SEE SHEET 5-22) IS THE CALCULATED VALUE DUE TO THE EFFECT OF PRESTRESSING WITH THE WEIGHT OF THE GIRDER ACTING, WITH AN ALLOWANCE FOR CAMBER GROWTH TO 90 DAYS. THE CONTRACTOR SHALL LIMIT THE CAMBER GROWTH TO A VALUE NOT TO EXCEED THE PREDICTED CAMBER AT ERECTION DIMENSION BY 1 INCH AT THE TIME OF DECK SLAB PLACEMENT. CAMBER GROWTH IS TO BE LIMITED BY WEIGHTING, FABRICATION SCHEDULING OR OTHER APPROVED MEANS.
5. DEAD LOAD DEFLECTION IS THE COMPUTED DEFLECTION DUE TO WEIGHT OF SLAB, DIAPHRAGMS, AND SUPERIMPOSED DEAD LOAD.
6. THE DESIGN SHOWN IS BASED ON THE USE OF 0.6" DIAMETER LOW-RELAXATION STRANDS MEETING THE REQUIREMENTS OF AASHTO M-203 (GRADE 270). INITIAL PRESTRESSING FORCE SHALL BE 43,900 LBS. PER STRAND. SLIGHT OVERSTRESSING UP TO 46,800 LBS. PER STRAND WILL BE ALLOWED TO OFFSET SEATING LOSSES.
7. TYPE III CEMENT MAY BE USED AT THE FABRICATOR'S OPTION.
8. SHOE PLATES MUST BE STRAIGHTENED PRIOR TO CASTING INTO GIRDER.
9. REINFORCING BARS PROJECTING FROM THE TOP OF THE GIRDER AND ALL REINFORCING LOCATED WITHIN FOUR FEET OF GIRDER ENDS SHALL BE UNCOATED CORROSION RESISTANT STEEL.

DESIGN DATA

DESIGN ACCORDING TO AASHTO LRFD BRIDGE DESIGN SPECIFICATIONS 2012, SIXTH EDITION.

GIRDERS:
f'ci (MIN. COMPRESSIVE STRENGTH OF CONCRETE AT TIME OF INITIAL PRESTRESS) = 7.5 ksi.
f'c = 9.5 ksi (ULTIMATE COMPRESSIVE STRENGTH)

PRESTRESSING STEEL:
0.6" DIAMETER SEVEN WIRE LOW RELAXATION STRANDS.
fpu = 58.6 KIPS PER STRAND;
fpy = 52.7 KIPS PER STRAND.

CONVENTIONAL REINFORCING BARS:
fy = 60 KSI

COMPOSITE SLAB:
f'c = 4.0 KSI
ALLOWANCE FOR FUTURE WEARING SURFACE = 30 psf
LIVE LOAD = HL-93 AND NMDOT PERMIT VEHICLE P327-13.
STAY-IN-PLACE DECK FORMS = 15 psf.

AMANDA J. WHITE
NEW MEXICO
19215
10/7/16
PROFESSIONAL ENGINEER

NO.	DESCRIPTION	DATE	BY
3			
2			
1			

REVISIONS

NEW MEXICO DEPARTMENT OF TRANSPORTATION

CITY OF GALLUP
ALLISON ROAD
BRIDGE OVER RIO PUERCO
BRIDGE NO. 9718

PRESTRESSED GIRDER DETAILS
SHEET 1 OF 2

DESIGNED BY: BOHANNAN HUSTON INC. PHONE: 505-823-1000 EMAIL:
DESIGNED BY: AJW DRAWN BY: LSM CHECKED BY: SMM

Bohannan Huston
www.bhinc.com 800.877.5332

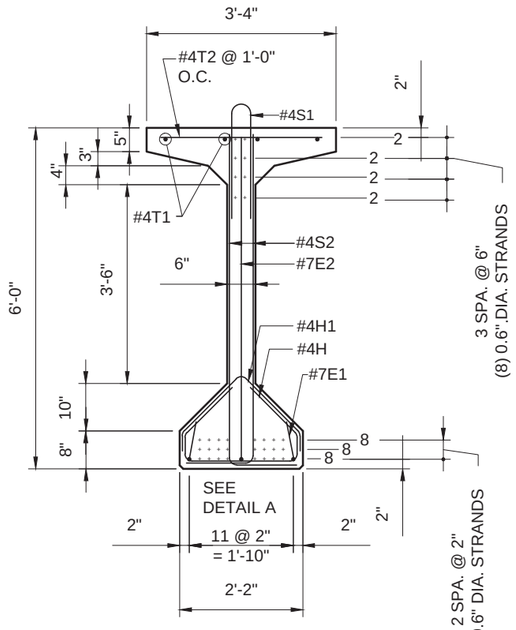

END VIEW

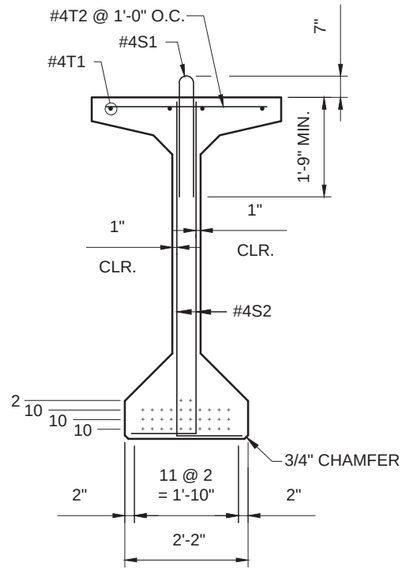

SECTION NEAR ℄ OF GIRDER

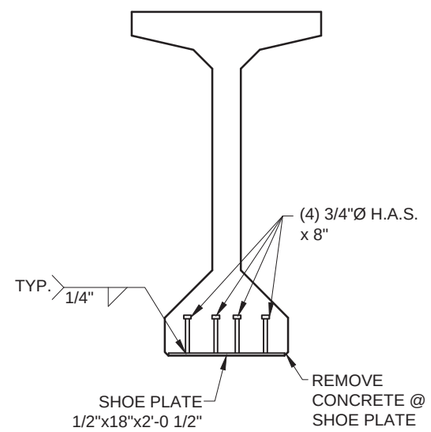

END VIEW

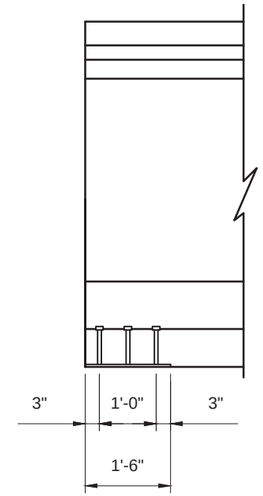

ELEVATION

SHOE PLATE

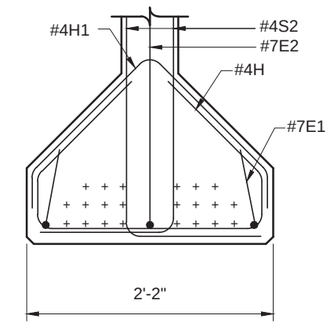

DETAIL A

BAR	TYPE	GIRDER					BAR BENDING DIAGRAM
		SIZE	"R"	"X"	LENGTH	NO. REQ'D	
E1	2	#7	3 1/8"	8'-0"	8'-8"	4	
E2	2	#7	3 1/8"	5'-8"	13'-8"	2	
S1	4	#4	1 3/4"	2'-3¼"	5'-0"	126	
S2	2	#4	1 1/2"	5'-8"	6'-8"	320	
H	3	#4	1 1/2"	---	5'-1"	54	
H1	5	#4	1 1/2"	---	3'-3 1/2"	54	
T1	1	#4			44'-0"	12	
T2	1	#4			3'-1"	126	

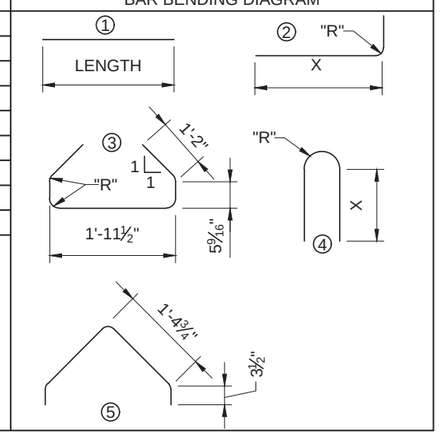

REINFORCING BARS REQ'D FOR ONE GIRDER

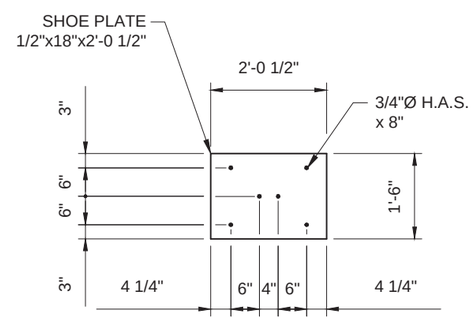

SHOE PL DETAIL

WEIGHT	CAMBER @ RELEASE	CAMBER @ ERECTION	DEAD LOAD DEFLECTION
61.41 TONS	0.969 IN.	1.669 IN.	-1.353 IN.

GIRDER DATA

AMANDA J. WHITE
NEW MEXICO
19215
PROFESSIONAL ENGINEER
10/7/16

NO.	DESCRIPTION	DATE	BY
3			
2			
1			

REVISIONS

NEW MEXICO DEPARTMENT OF TRANSPORTATION

CITY OF GALLUP
ALLISON ROAD
BRIDGE OVER RIO PUERCO
BRIDGE NO. 9718

PRESTRESSED GIRDER DETAILS
SHEET 2 OF 2

DESIGNED BY: BOHANNAN HUSTON INC. PHONE: 505-823-1000 EMAIL:
DESIGNED BY: AJW DRAWN BY: LSM CHECKED BY: SMM

Bohannan Huston
www.bhinc.com 800.877.5332

PRESTRESSED CONCRETE BEAM TYPE	H (IN)	A (IN)	B (IN)	C (IN)	D (IN)	L (IN)	N	S1 (IN)	DIAPHRAGM UNIT WEIGHT (LB/FT)*	CLIP ANGLE WEIGHT (LB)	BACK PLATE WEIGHT (LB)
TYPE 72 MODIFIED	33	9	7 1/2"	21	5	28	4	6	51	35	15

* MULTIPLY BY DIAPHRAGM LENGTH (S-A) TO OBTAIN TOTAL DIAPHRAGM WEIGHT.

m = SLOPE OF BENT PLATE DIAPHRAGM (SEE BRIDGE PLANS FOR ELEVATIONS AT CONNECTION POINTS).

A = THICKNESS OF GIRDER WEB PLUS 3" (SEE TABLE).

B = DISTANCE FROM TOP OF STEEL DIAPHRAGM TO CENTER OF FIRST HOLE.

C = DISTANCE FROM TOP OF BEAM TO ℄ OF FIRST INSERT.

D = DISTANCE FROM CLIP ANGLE EDGE TO CENTER OF FIRST HOLE (CLIP ANGLE/DIAPHRAGM CONNECTION).

H = DEPTH OF BENT PLATE DIAPHRAGM.

L = LENGTH OF BACK PLATES AND CLIP ANGLES.

N = NUMBER OF BOLT SPACES IN GIRDER/CLIP ANGLE CONNECTION.

S1 = HOLE SPACING.

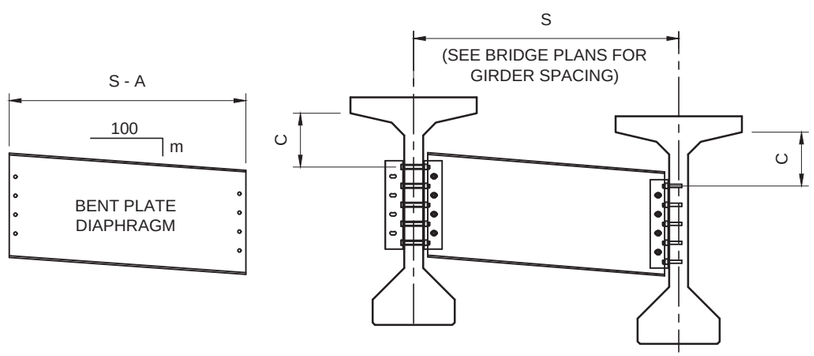

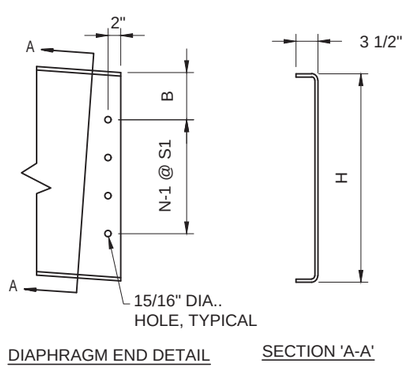

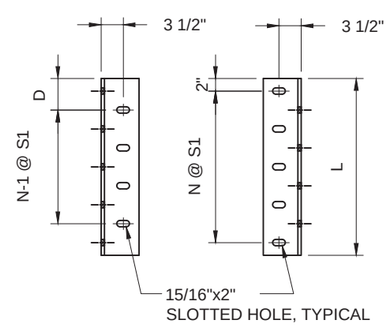

3/8" BENT PLATE DIAPHRAGM

(SEE TABLE FOR HEIGHT 'H')

CLIP ANGLE DETAIL

(L 6x6x⅜")

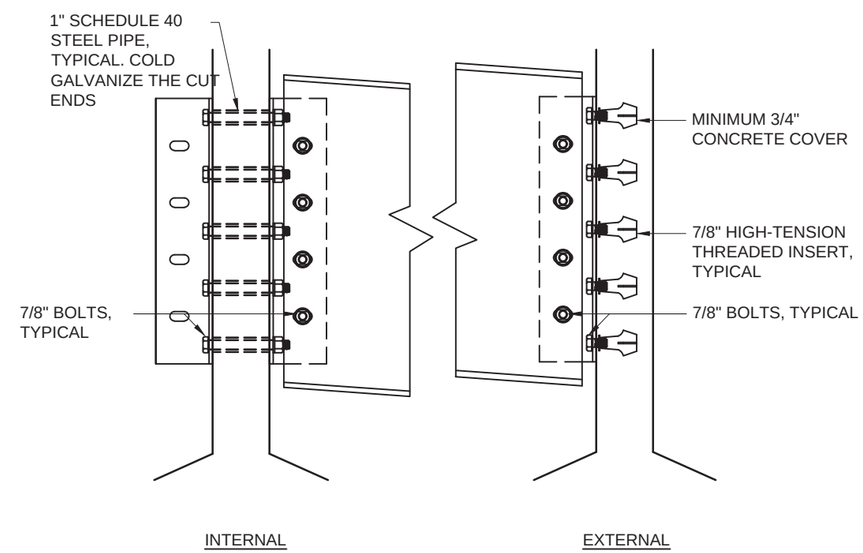

GIRDER CONNECTION DETAIL

DIAPHRAGM GENERAL NOTES:

1. ALL STRUCTURAL STEEL ELEMENTS IN THIS DETAIL SHALL BE COMPOSED OF WEATHERING STEEL CONFORMING TO AASHTO M 270, GRADE 50W, OR HOT-DIPPED GALVANIZED STEEL CONFORMING TO AASHTO M 270, GRADE 36. IF WEATHERING STEEL IS USED, ALL ELEMENTS SHALL BE SAND BLASTED TO SSPC SP-6 AND WET PRIOR TO SHIPPING. PAINTING OF THESE ELEMENTS IS NOT REQUIRED.
2. BOLTS SHALL MEET THE REQUIREMENTS OF AASHTO M 164. IF WEATHERING STEEL IS USED FOR THIS DETAIL, TYPE 3 WEATHERING STEEL BOLTS SHALL BE USED. IF GALVANIZED STEEL ELEMENTS ARE USED, BOLTS SHALL BE GALVANIZED AS PER AASHTO M 298.
3. THE VERTICAL DISTANCE BETWEEN ANY TWO HOLES OR INSERTS SHALL NOT VARY FROM THE SPECIFIED DISTANCE BY MORE THAN 1/16". ALSO, THE TOTAL LENGTH OF THE GROUP OF HOLES OR INSERTS SHALL NOT VARY FROM THE DESIGN LENGTH BY MORE THAN 1/16". THE PRESTRESSED GIRDER FABRICATOR SHALL TAKE APPROPRIATE MEASURES TO ENSURE PROPER PLACEMENT OF INSERTS DURING THE GIRDER FABRICATION PROCESS.
4. CLIP ANGLES SHALL BE ATTACHED TO THE PRESTRESSED GIRDER AT THE GIRDER FABRICATION SITE PRIOR TO TRANSPORT.
5. BENT PLATE DIAPHRAGMS AND CLIP ANGLES SHALL BE PAID FOR UNDER "ITEM No. 541000 - STRUCTURAL STEEL FOR CONCRETE BRIDGES." BOLTS, NUTS AND WASHERS ARE INCIDENTAL TO "ITEM No. 541000 - STRUCTURAL STEEL FOR CONCRETE BRIDGES." THREADED INSERTS AND PIPE INSERTS ARE INCIDENTAL TO THE PRESTRESSED CONCRETE BEAMS.
6. AT LOCATIONS WHERE STEEL IS FASTENED TO CONCRETE, THE MAXIMUM INSTALLATION TENSION FOR THE BOLTS SHALL NOT EXCEED 5 KIPS. TESTS SHALL BE PERFORMED TO DETERMINE THE TORQUE NECESSARY TO ACHIEVE THE SPECIFIED INSTALLATION TENSION.
7. ALL STEEL DIAPHRAGMS SHALL BE STAMPED OR MARKED WITH PAINT ON THE UPSTATION FACE OF DIAPHRAGM INDICATING PLACEMENT OF DIAPHRAGM LEFT OR RIGHT OF CENTERLINE OF CONSTRUCTION.

AMANDA J. WHITE
NEW MEXICO
19215
PROFESSIONAL ENGINEER
10/7/16

NO.	DESCRIPTION	DATE	BY
3			
2			
1			

REVISIONS

NEW MEXICO DEPARTMENT OF TRANSPORTATION

CITY OF GALLUP
ALLISON ROAD
BRIDGE OVER RIO PUERCO
BRIDGE NO. 9718

DIAPHRAGM DETAILS

DESIGNED BY: AJW DRAWN BY: LSM CHECKED BY: SMM
DESIGNED BY: BOHANNAN HUSTON INC. PHONE: 505-823-1000 EMAIL:

Bohannan Huston
www.bhinc.com 800.877.5332

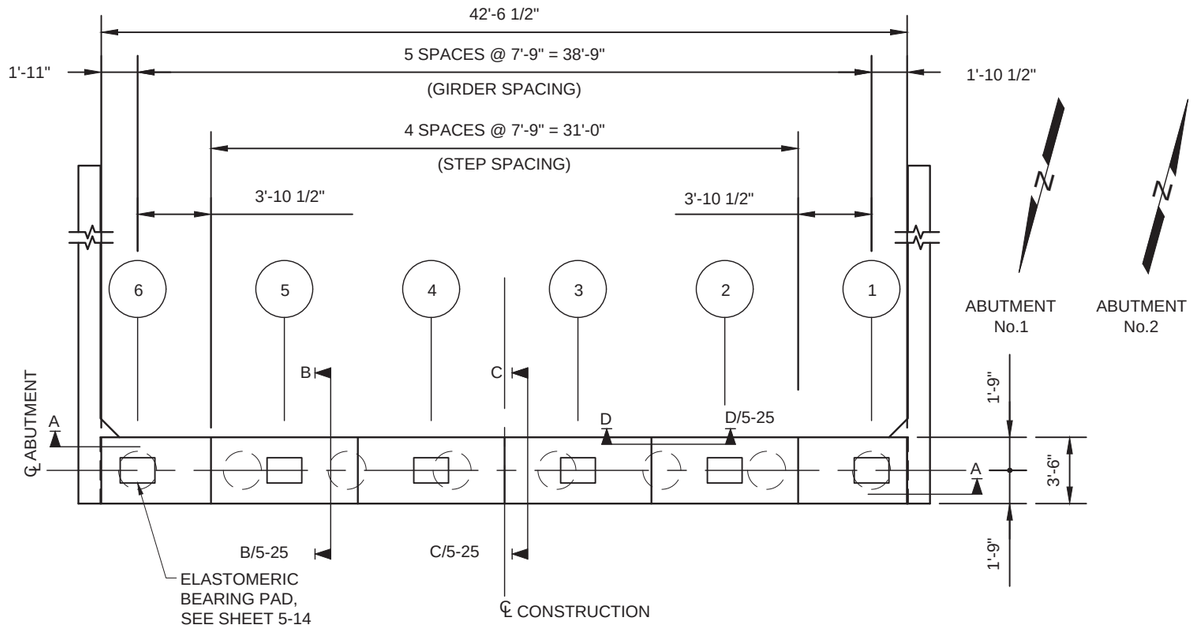

PLAN

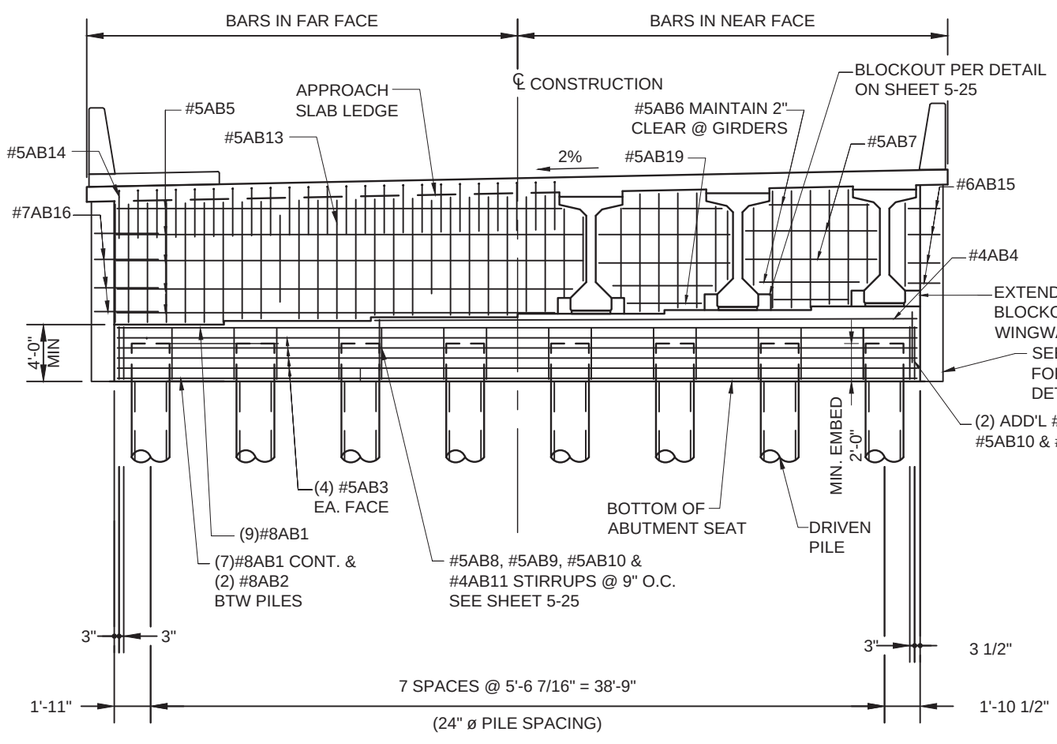

ELEVATION (SECTION A-A)

SCHEDULE OF REINFORCING STEEL FOR ABUTMENTS

MARK	SIZE	LENGTH FEET	LENGTH INCHES	NO REQ'D	BEND DIAGRAM	REMARKS
#8AB1	# 8	42	2	32	1	
#8AB2	# 8	3	2	28	1	
#5AB3	# 5	42	2	16	1	
#4AB4	# 4	28	11	10	1	
#5AB5*	# 5	42	2	10	1	
#5AB6*	# 5	5	4	25	1	
#5AB7*	# 5	6	11	20	1	
#5AB8	# 5	10	11	116	2	A = 3'-6", B= 3'-0"
#5AB9	# 5	4	10	232	6	A = 3'-6"
#5AB10	# 5	8	0	116	3	A = 2'-0", B = 3'-0"
#4AB11	# 4	8	4	78	3	A = 2'-8", B = 3'-0"
#5AB12*	# 5	29	8	32	15	A = 6'-1", B = 2'-8", C = 2'-0"
#5AB13*	# 5	6	1	60	1	
#5AB14*	# 5	5	0	86	4	A = 2'-6", B = 2'-6"
#6AB15	# 6	3	6	36	4	A = 2'-6", B = 1'-0"
#7AB16	# 7	7	0	16	4	A = 6'-0", B= 1'-0"
#7AB17	# 7	10	0	16	16	A = 2'-9", B= 2'-9", C = 2'-0"
#11AB18*	#11	1	6	10	1	
#5AB19	#5	3	9	5	1	

*DENOTES EPOXY COATED BARS

BAR SIZE	USE	MIMIMUM 'R'
#4 & #5	GENERAL	6.0 d_b
#4 & #5	STIRRUPS AND TIES	4.0 d_b
#6 THRU #8	GENERAL	6.0 d_b
#9 THRU #11	GENERAL	8.0 d_b

d_b = BAR DIAMETER

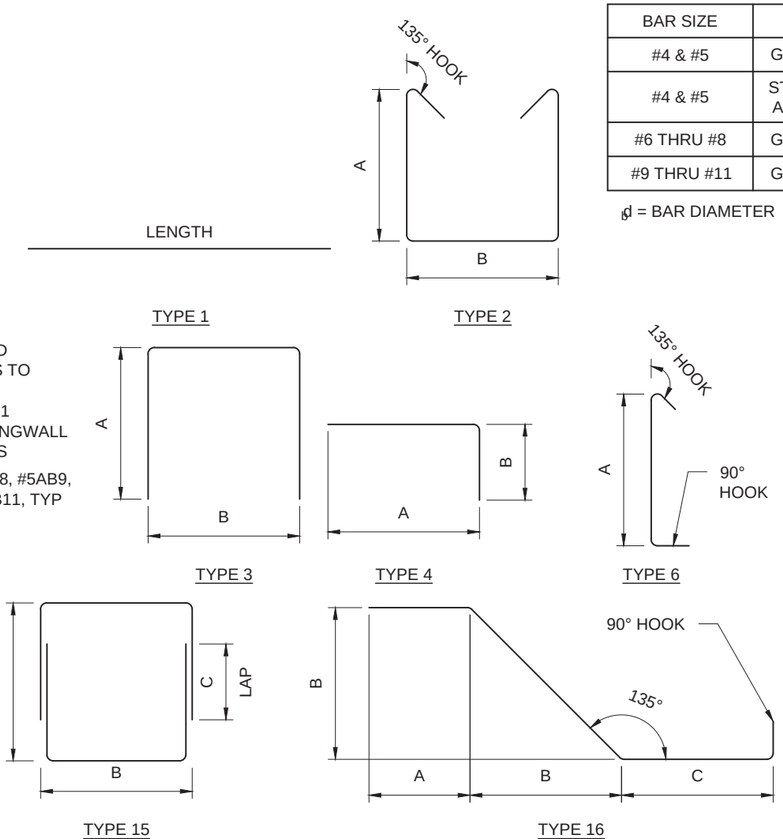

AMANDA J. WHITE
NEW MEXICO
19215
PROFESSIONAL ENGINEER
10/7/16

NO.	DESCRIPTION	DATE	BY
3			
2			
1			

REVISIONS

NEW MEXICO DEPARTMENT OF TRANSPORTATION

CITY OF GALLUP
ALLISON ROAD
BRIDGE OVER RIO PUERCO
BRIDGE NO. 9718

ABUTMENT NO. 1 AND NO. 2
PLAN AND ELEVATION

DESIGNED BY: BOHANNAN HUSTON INC. PHONE: 505-823-1000 EMAIL:
DESIGNED BY: AJW DRAWN BY: LSM CHECKED BY: SMM

Bohannan Huston
www.bhinc.com 800.877.5332

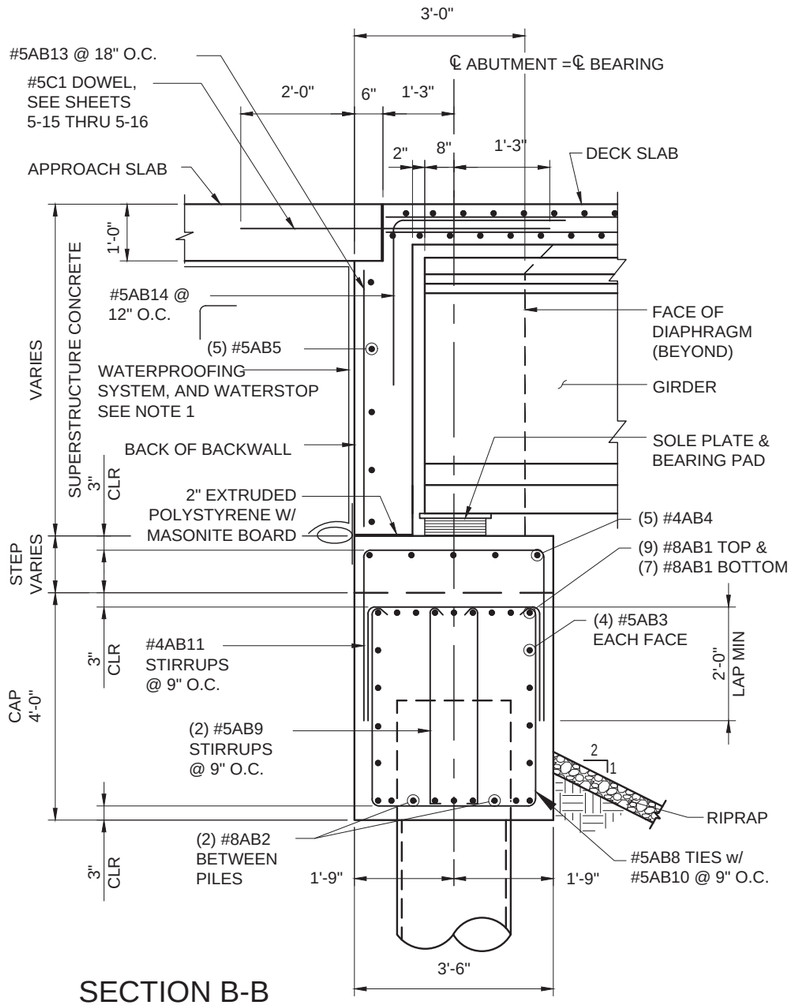

SECTION B-B
ABUTMENT SECTION (TYP @ GIRDERS)

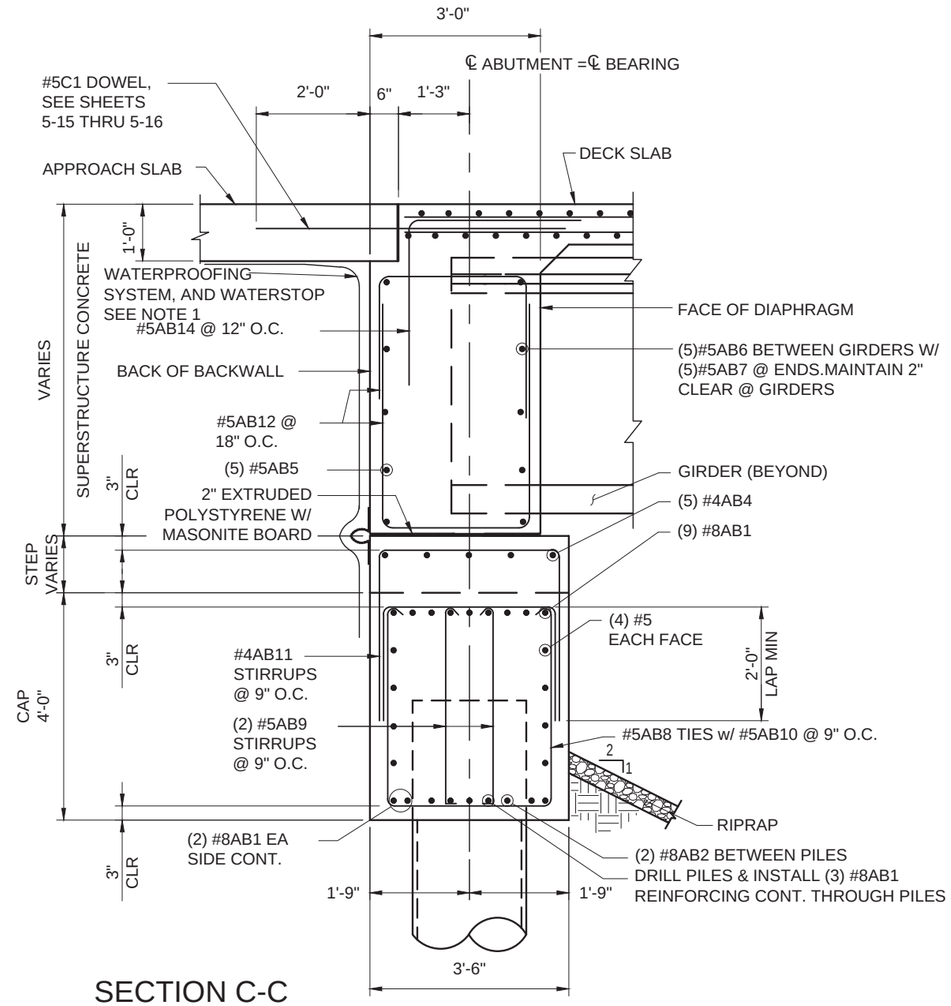

SECTION C-C
ABUTMENT SECTION (TYP BETWEEN GIRDERS)

NOTES

1. PROVIDE FLEXIBLE PVC WATERSTOP AS MANUFACTURED BY GREENSTREAK, TEAR WEB STYLE #700 OR #728 OR APPROVED EQUAL. WATER PROOFING SYSTEM FOR PROTECTION OF BACKSIDES OF BRIDGE COMPONENTS. SUBSECTION 511.3.8.2 - INCIDENTAL TO BID ITEM NO 512003 - HIGH PERFORMANCE CONCRETE (HPD).
2. CONTRACTOR MUST PLACE THE JOINT FILLER ON THE FULL WIDTH OF THE ABUTMENT SEAT AT THE TIME OF PLACING THE DIAPHRAGM CONCRETE. THE JOINT FILLER SHALL BE TRIMMED FLUSH WITH THE FACE OF DIAPHRAGM AFTER THE CONCRETE HAS HARDENED.

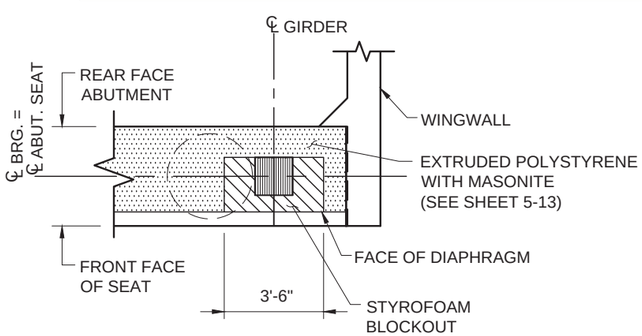

GIRDER SEAT BLOCKOUT & FILLER DETAIL

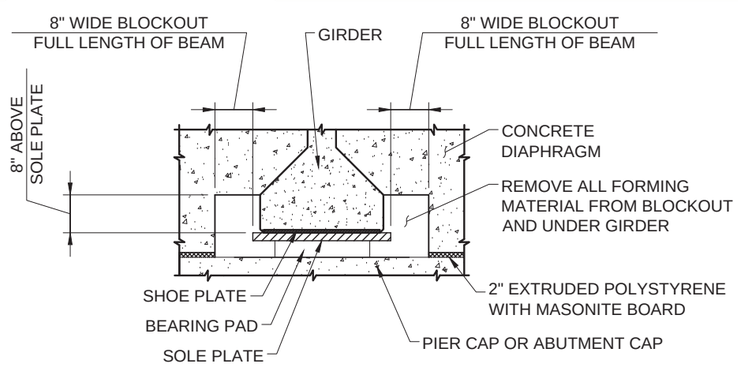

GIRDER SEAT BLOCKOUT DETAIL

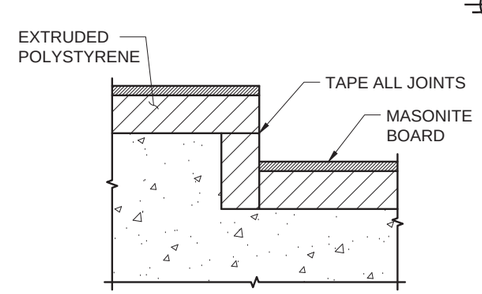

SECTION D-D

NO.	DESCRIPTION	DATE	BY
3			
2			
1			

REVISIONS

NEW MEXICO DEPARTMENT OF TRANSPORTATION

CITY OF GALLUP
ALLISON ROAD
BRIDGE OVER RIO PUERCO
BRIDGE NO. 9718

ABUTMENT DETAILS
SHEET 1 OF 2

DESIGNED BY: BOHANNAN HUSTON INC. PHONE: 505-823-1000 EMAIL:
DESIGNED BY: AJW DRAWN BY: LSM CHECKED BY: SMM

Bohannan Huston
www.bhinc.com 800.877.5332

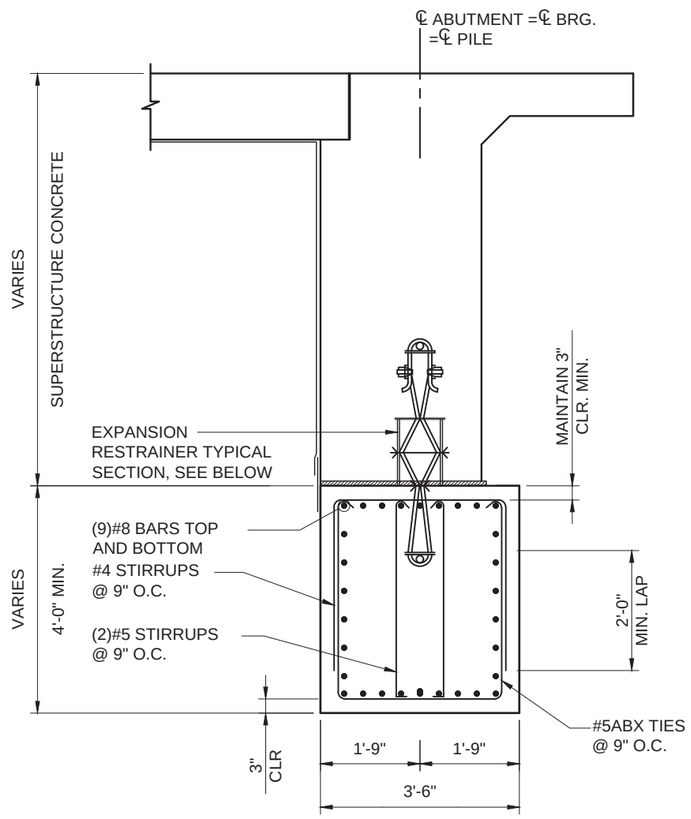

NOTE: REINFORCEMENT NOT SHOWN FOR CLARITY

ABUTMENT SECTION PERPENDICULAR TO ℄ ABUTMENT BETWEEN GIRDER

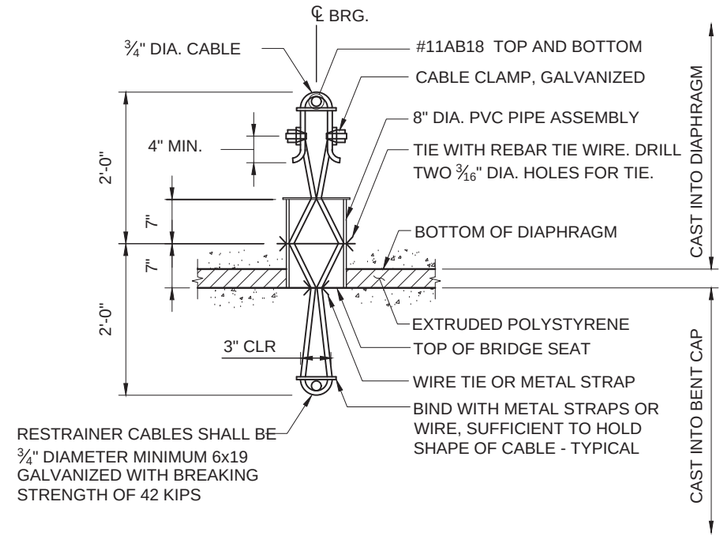

EXPANSION RESTRAINER TYPICAL SECTION

EXPANSION RESTRAINER DETAIL

(1 REQUIRED BETWEEN EACH GIRDER - AS SHOWN)

EXPANSION RESTRAINER NOTES:

1. RESTRAINER CABLES SHALL BE 3/4" DIA. PREFORMED 6x19 EPOXY COATED OR GALVANIZED CABLE WITH MINIMUM BREAKING STRENGTH OF 42 kips.
2. PLACE RESTRAINER UNITS AT CENTER-LINE OF BEARING AND PARALLEL TO CENTERLINE OF GIRDER.
3. COST FOR THE RESTRAINERS SHALL BE INCIDENTAL TO CONSTRUCTION AND NO SEPARATE MEASUREMENT OR PAYMENT SHALL BE MADE THEREFOR.

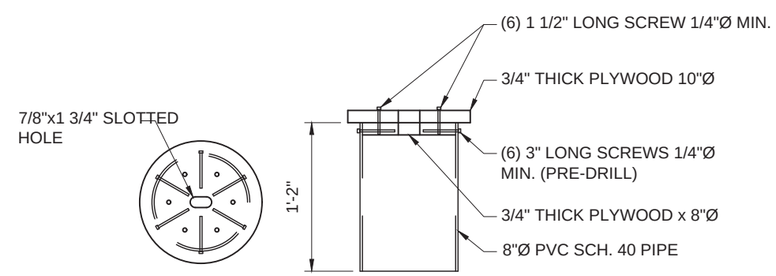

8" DIAMETER PVC PIPE ASSEMBLY

AMANDA J. WHITE
NEW MEXICO
19215
PROFESSIONAL ENGINEER
10/7/16

NO.	DESCRIPTION	DATE	BY
3			
2			
1			

REVISIONS

NEW MEXICO DEPARTMENT OF TRANSPORTATION

CITY OF GALLUP
ALLISON ROAD
BRIDGE OVER RIO PUERCO
BRIDGE NO. 9718

ABUTMENT DETAILS
SHEET 2 OF 2

DESIGNED BY: AJW DRAWN BY: VKL CHECKED BY: SMM
DESIGNED BY: BOHANNAN HUSTON INC. PHONE: 505-823-1000 EMAIL:

Bohannan Huston
www.bhinc.com 800.877.5332

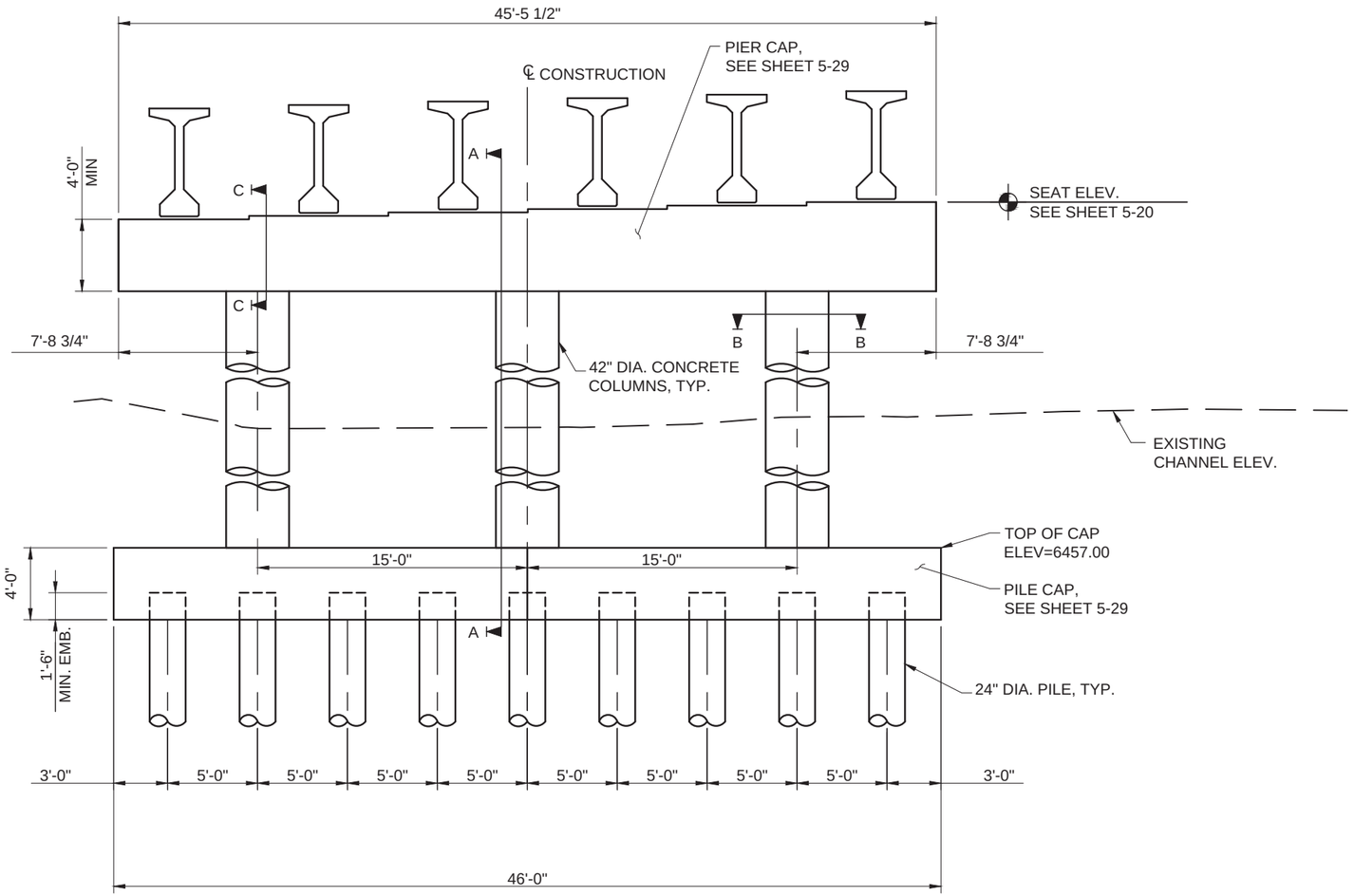

NOTE: SEE SHEET 5-29 FOR
SECTIONS A-A, B-B & C-C

ELEVATION

AMANDA J. WHITE
NEW MEXICO
19215
PROFESSIONAL ENGINEER
10/7/16

NO.	DESCRIPTION	DATE	BY
3			
2			
1			

REVISIONS

NEW MEXICO DEPARTMENT
OF TRANSPORTATION

CITY OF GALLUP
ALLISON ROAD
BRIDGE OVER RIO PUERCO
BRIDGE NO. 9718

PIER CAP AND COLUMN ELEVATION

DESIGNED BY: AJW DRAWN BY: LSM CHECKED BY: SMM
DESIGNED BY: BOHANNAN HUSTON INC. PHONE: 505-823-1000 EMAIL:

Bohannan Huston
www.bhinc.com 800.877.5332

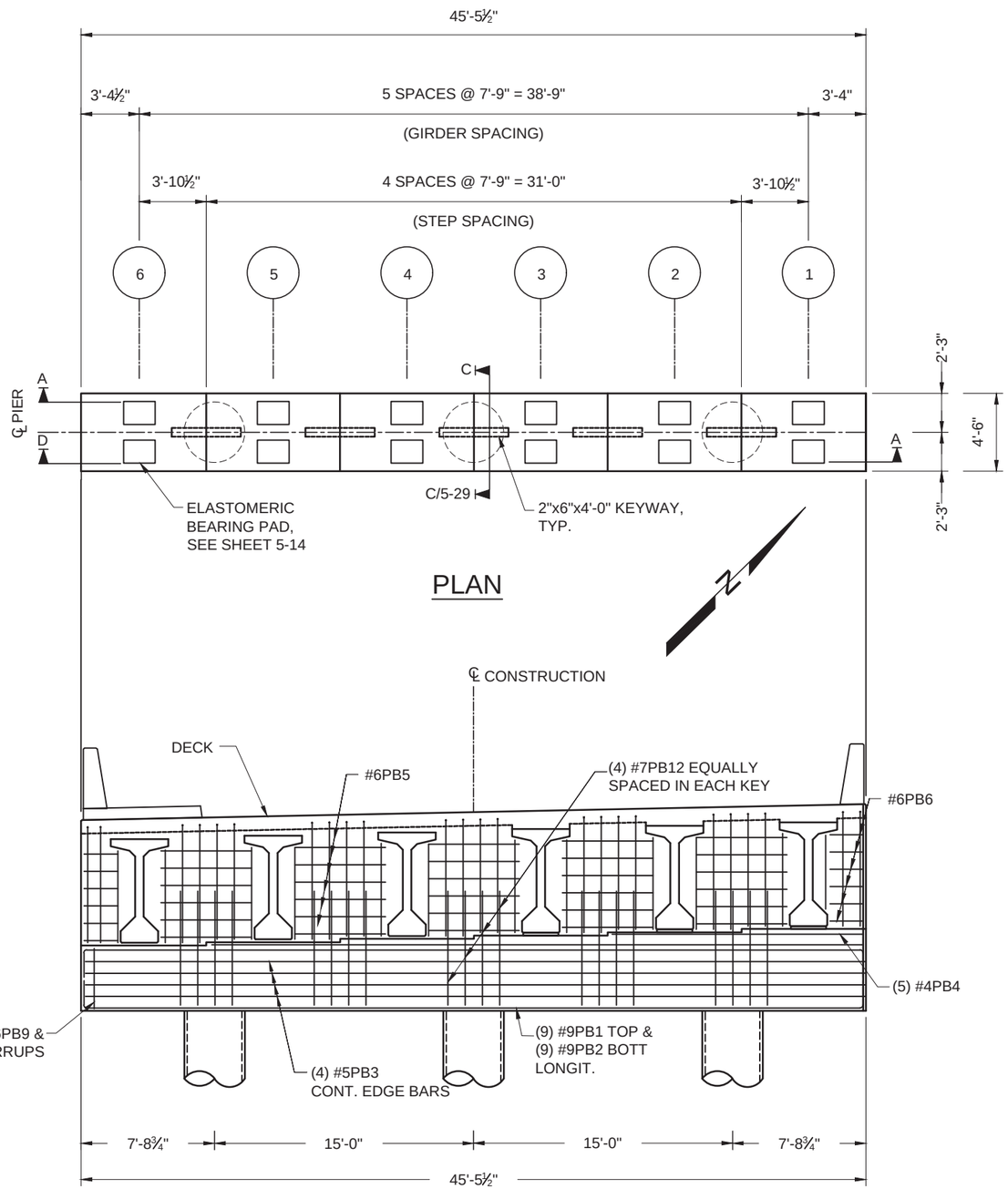

PLAN

ELEVATION (SECTION A-A)

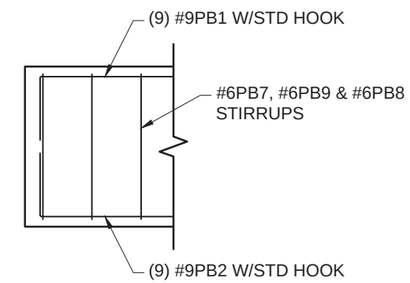

BEAM END SECTION D-D

AMANDA J. WHITE
NEW MEXICO
19215
PROFESSIONAL ENGINEER
10/7/16

NO.	DESCRIPTION	DATE	BY
3			
2			
1			

REVISIONS

NEW MEXICO DEPARTMENT
OF TRANSPORTATION

CITY OF GALLUP
ALLISON ROAD
BRIDGE OVER RIO PUERCO
BRIDGE NO. 9718

PIER CAP PLAN
AND ELEVATION

DESIGNED BY: AJW DRAWN BY: VKL CHECKED BY: SMM

DESIGNED BY: BOHANNAN HUSTON INC. PHONE: 505-823-1000 EMAIL:

Bohannan Huston
www.bhinc.com 800.877.5332

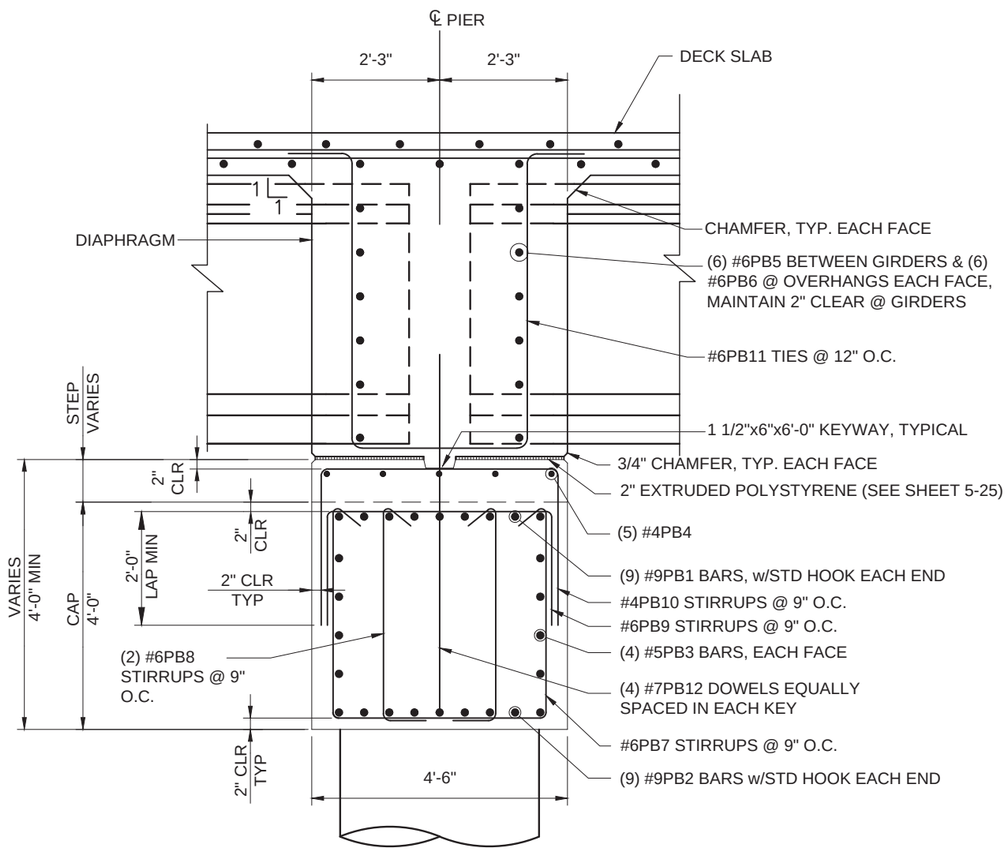

PIER CAP SECTION (SECTION C-C)

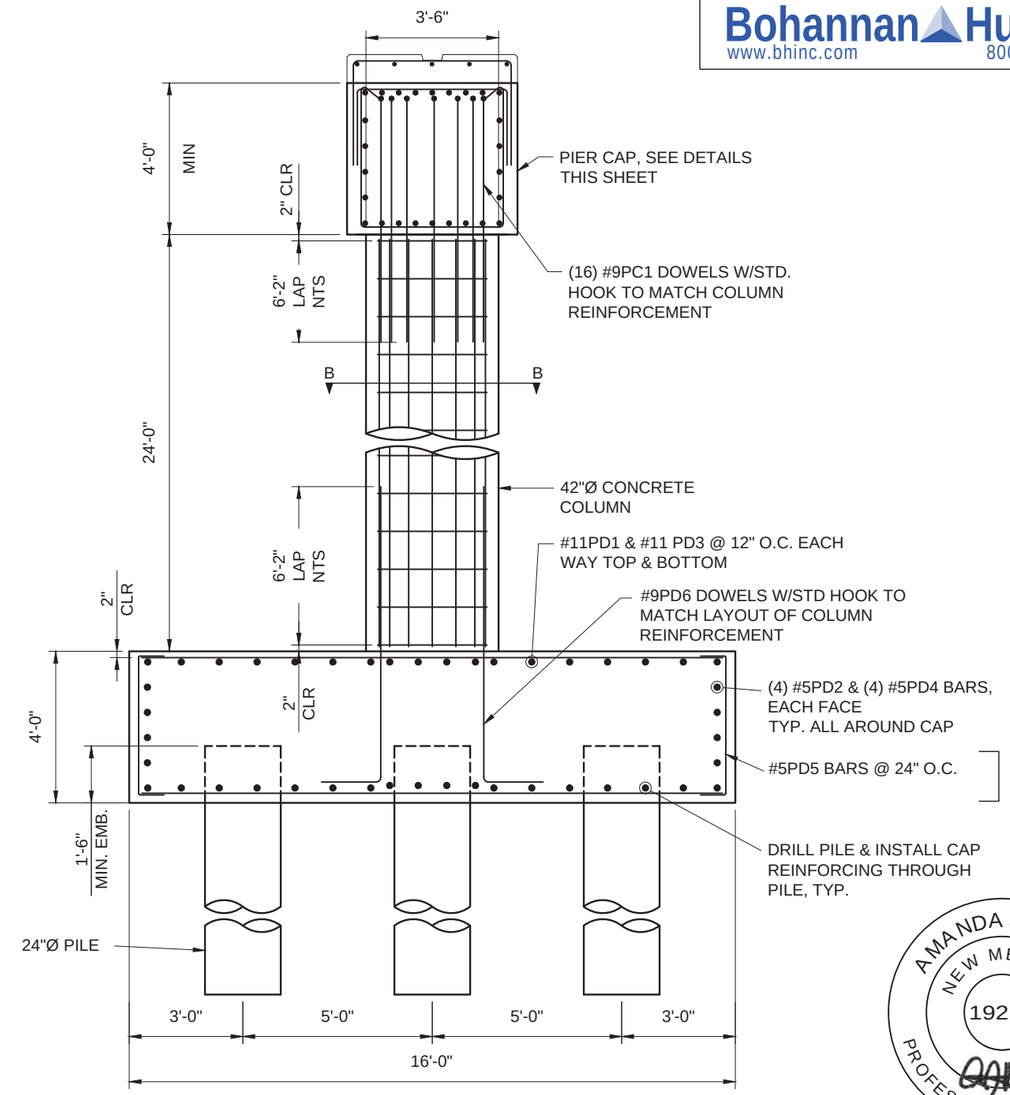

PIER COLUMN WALL (SECTION A-A)

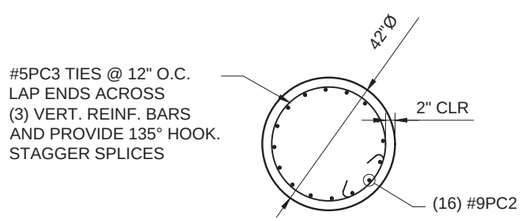

SECTION 'B-B'

AMANDA J. WHITE
NEW MEXICO
19215
PROFESSIONAL ENGINEER
10/7/16

NO.	DESCRIPTION	DATE	BY
3			
2			
1			

REVISIONS

NEW MEXICO DEPARTMENT OF TRANSPORTATION

CITY OF GALLUP
ALLISON ROAD
BRIDGE OVER RIO PUERCO
BRIDGE NO. 9718

PIER CAP & COLUMN DETAILS

DESIGNED BY: AJW DRAWN BY: VKL CHECKED BY: SMM
DESIGNED BY: BOHANNAN HUSTON INC. PHONE: 505-823-1000 EMAIL:

Bohannan Huston
www.bhinc.com 800.877.5332

SCHEDULE OF REINFORCING STEEL FOR INTERMEDIATE PIER

MARK	SIZE	LENGTH		NO REQ'D	BEND DIAGRAM	REMARKS
		FEET	INCHES			
#9PB1	# 9	48	2	9	3	A = 1'-7", B = 45'-0"
#9PB2	# 9	48	2	9	3	A = 1'-7", B = 45'-0"
#5PB3	# 5	45	0	8	1	
#4PB4	# 4	30	1	5	1	
#6PB5*	# 6	5	3	60	1	
#6PB6*	# 6	2	0	24	1	
#6PB7	# 6	12	10	61	2	A = 3'-6", B = 4'-0"
#6PB8	# 6	5	4	122	6	A = 3'-8"
#6PB9	# 6	8	2	61	3	A = 2'-0", B = 4'-2"
#4PB10	# 4	9	6	32	3	A = 2'-8", B = 4'-2"
#6PB11*	# 6	19	8	24	7	A = 1'-0", B = 6'-9", C = 4'-2"
#7PB12*	# 7	5	6	20	1	
#9PC1	# 9	11	9	48	4	A = 10'-1", B = 1'-8"
#9PC2	# 9	23	8	48	1	
#5PC3	# 5	13	10	75	5	
#11PD1	#11	45	6	36	1	
#5PD2	# 5	45	6	8	1	
#11PD3	#11	15	6	94	1	
#5PD4	# 5	15	6	8	1	
#5PD5	# 5	5	3	48	3	A = 10", B = 3'-7"
#9PD6	# 9	11	9	48	4	A = 10'-1", B = 1'-8"

*DENOTES EPOXY COATED BAR

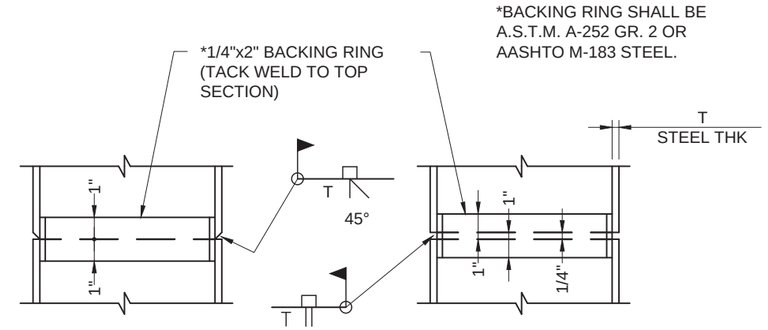

SHOWING ALTERNATE FIELD WELDS

TYPICAL PERMISSIBLE FIELD SPLICES FOR PIPE PILES

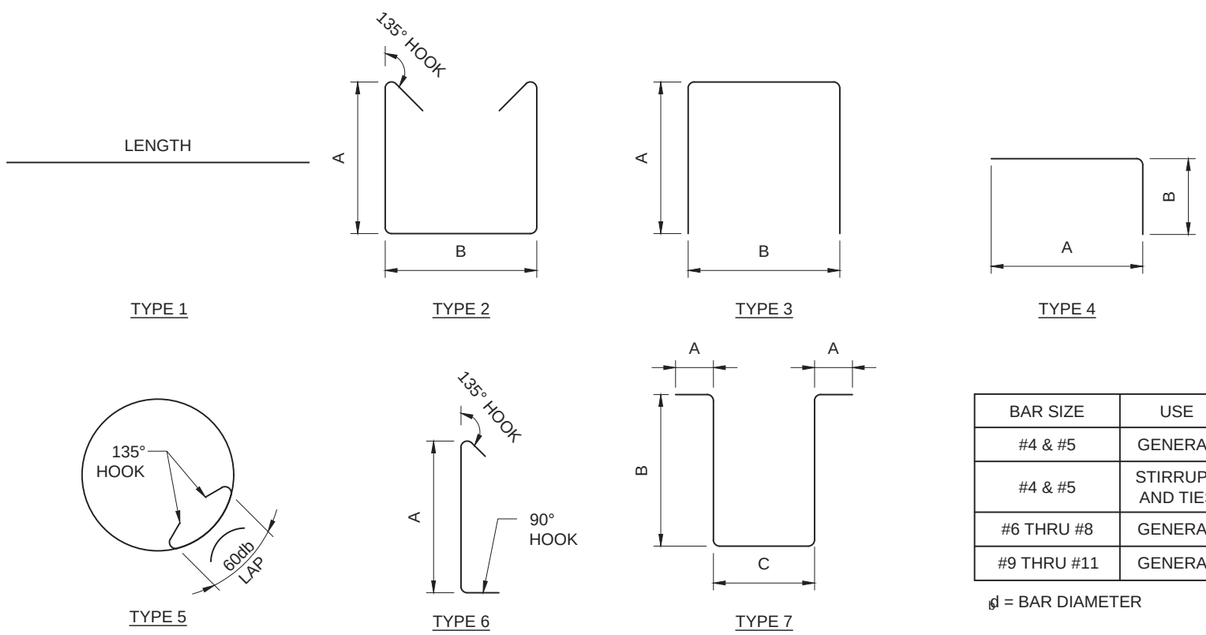

BAR SIZE	USE	MIMIMUM 'R'
#4 & #5	GENERAL	6.0 d_b
#4 & #5	STIRRUPS AND TIES	4.0 d_b
#6 THRU #8	GENERAL	6.0 d_b
#9 THRU #11	GENERAL	8.0 d_b

d_b = BAR DIAMETER

AMANDA J. WHITE
NEW MEXICO
19215
PROFESSIONAL ENGINEER
10/7/16

NO.	DESCRIPTION	DATE	BY
3			
2			
1			

REVISIONS

NEW MEXICO DEPARTMENT OF TRANSPORTATION

CITY OF GALLUP
ALLISON ROAD
BRIDGE OVER RIO PUERCO
BRIDGE NO. 9718

PIER REINFORCING SCHEDULE AND MISCELLANEOUS DETAILS

DESIGNED BY: BOHANNAN HUSTON INC. PHONE: 505-823-1000 EMAIL:
DESIGNED BY: AJW DRAWN BY: LSM CHECKED BY: SMM

Bohannan Huston
www.bhinc.com 800.877.5332

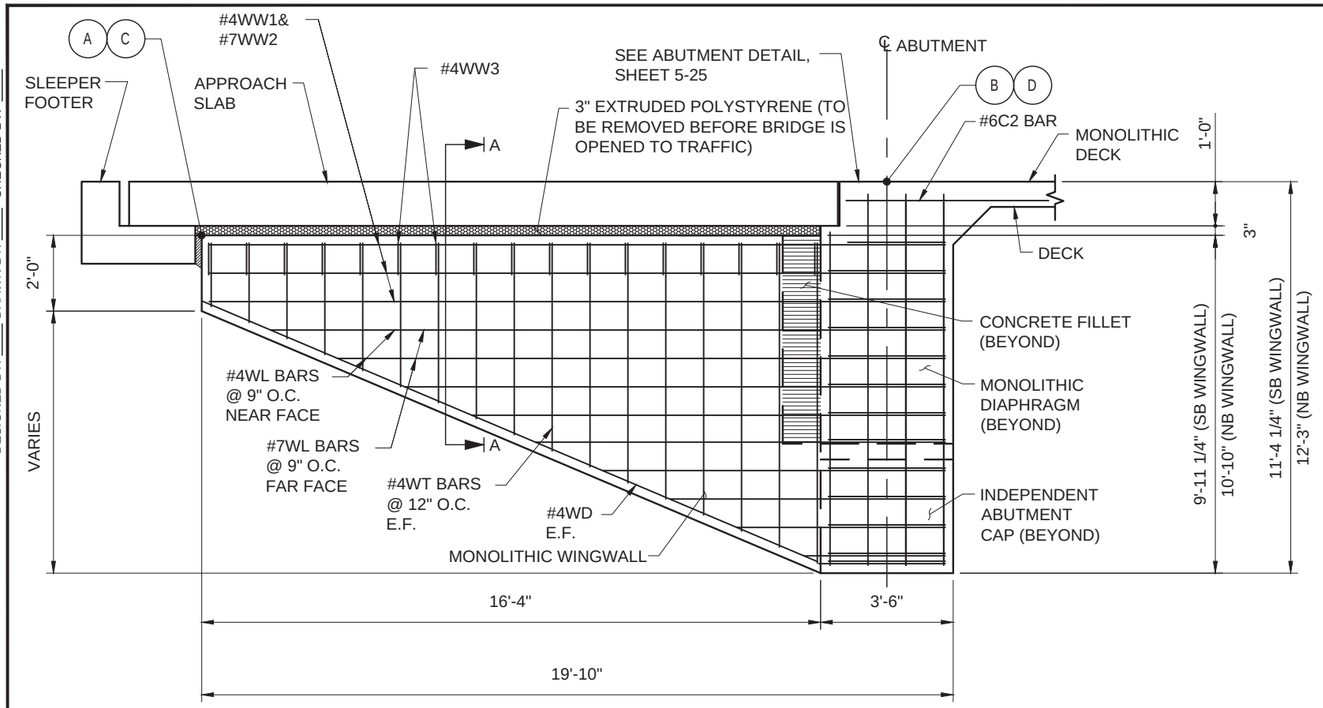

WINGWALL ELEVATION

(TYPICAL OF 4 LOCATIONS)

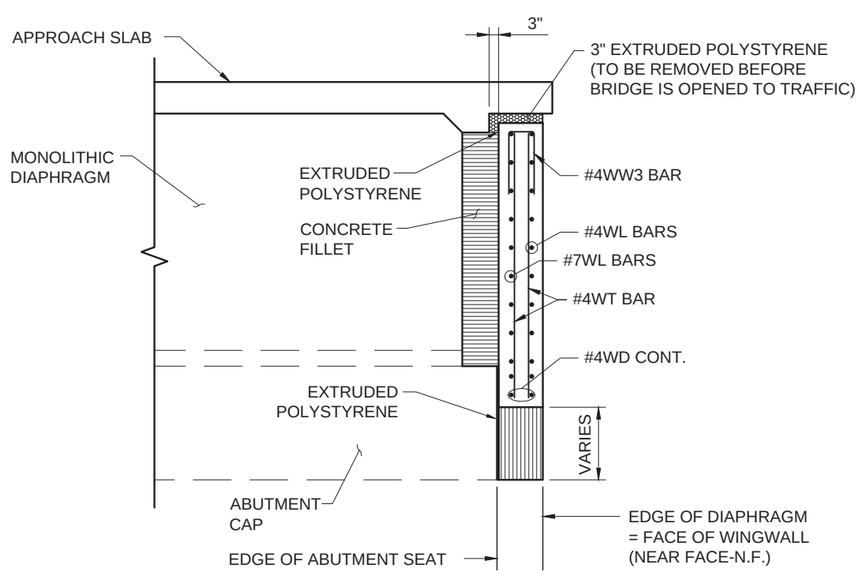

WINGWALL SECTION A-A

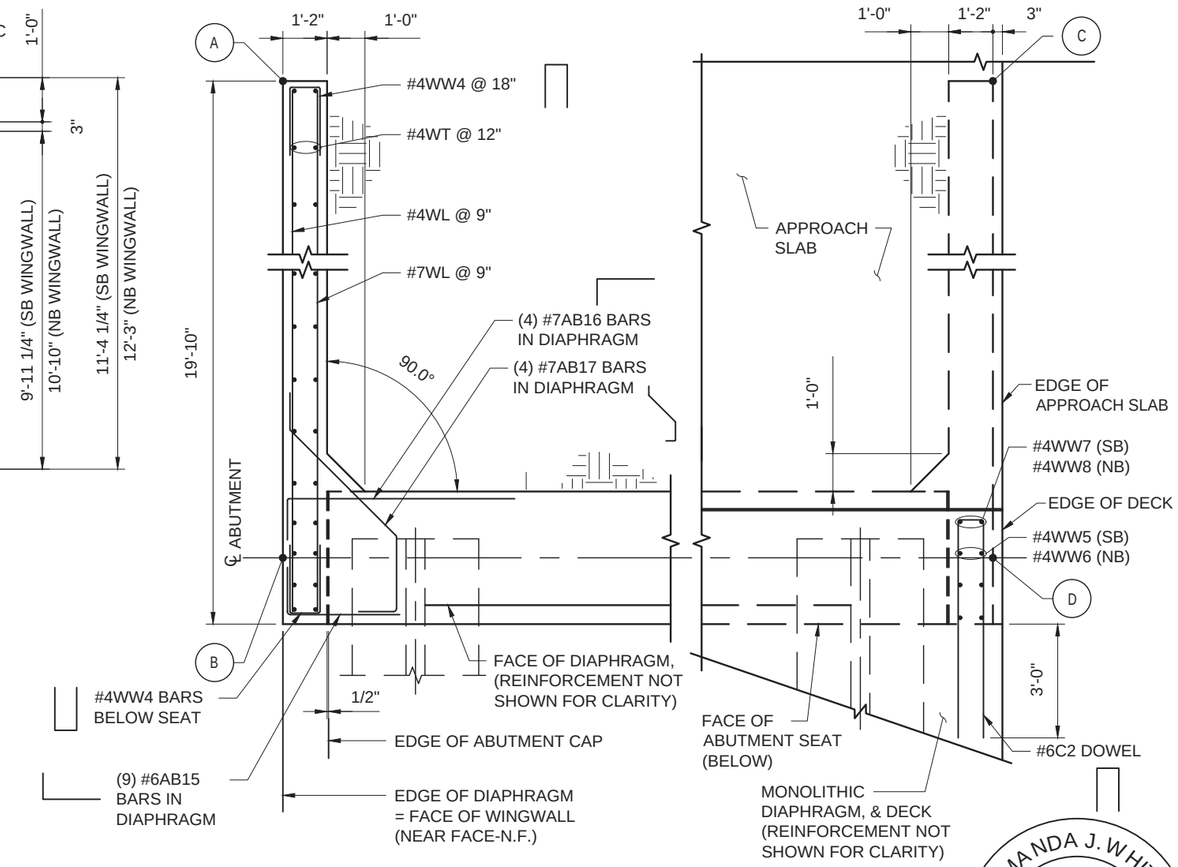

WINGWALL PLAN

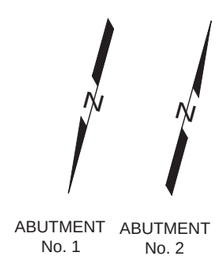

WINGWALL POINT TABLE

WINGWALL POINT	STATION	OFFSET	ELEVATION
ABUTMENT No. 1 - A	58+01.24	22.46' (RT)	6490.17'
ABUTMENT No. 1 - B	58+19.32	22.46' (RT)	6491.77'
ABUTMENT No. 1 - C	58+01.24	22.50' (LT)	6489.27'
ABUTMENT No. 1 - D	58+19.32	22.50' (LT)	6490.87'
ABUTMENT No. 2 - A	60+87.41	22.50' (LT)	6492.20'
ABUTMENT No. 2 - B	60+69.32	22.50' (LT)	6493.43'
ABUTMENT No. 2 - C	60+87.41	22.46' (RT)	6493.09'
ABUTMENT No. 2 - D	60+69.32	22.46' (RT)	6494.33'

AMANDA J. WHITE
NEW MEXICO
19215
PROFESSIONAL ENGINEER
10/7/16

NO.	DESCRIPTION	DATE	BY
3			
2			
1			

REVISIONS

NEW MEXICO DEPARTMENT
OF TRANSPORTATION

CITY OF GALLUP
ALLISON ROAD
BRIDGE OVER RIO PUERCO
BRIDGE NO. 9718

WINGWALL DETAILS

DESIGNED BY: AJW DRAWN BY: VKL CHECKED BY: GEL

DESIGNED BY: BOHANNAN HUSTON INC. PHONE: 505-823-1000 EMAIL:

Bohannan Huston
www.bhinc.com 800.877.5332

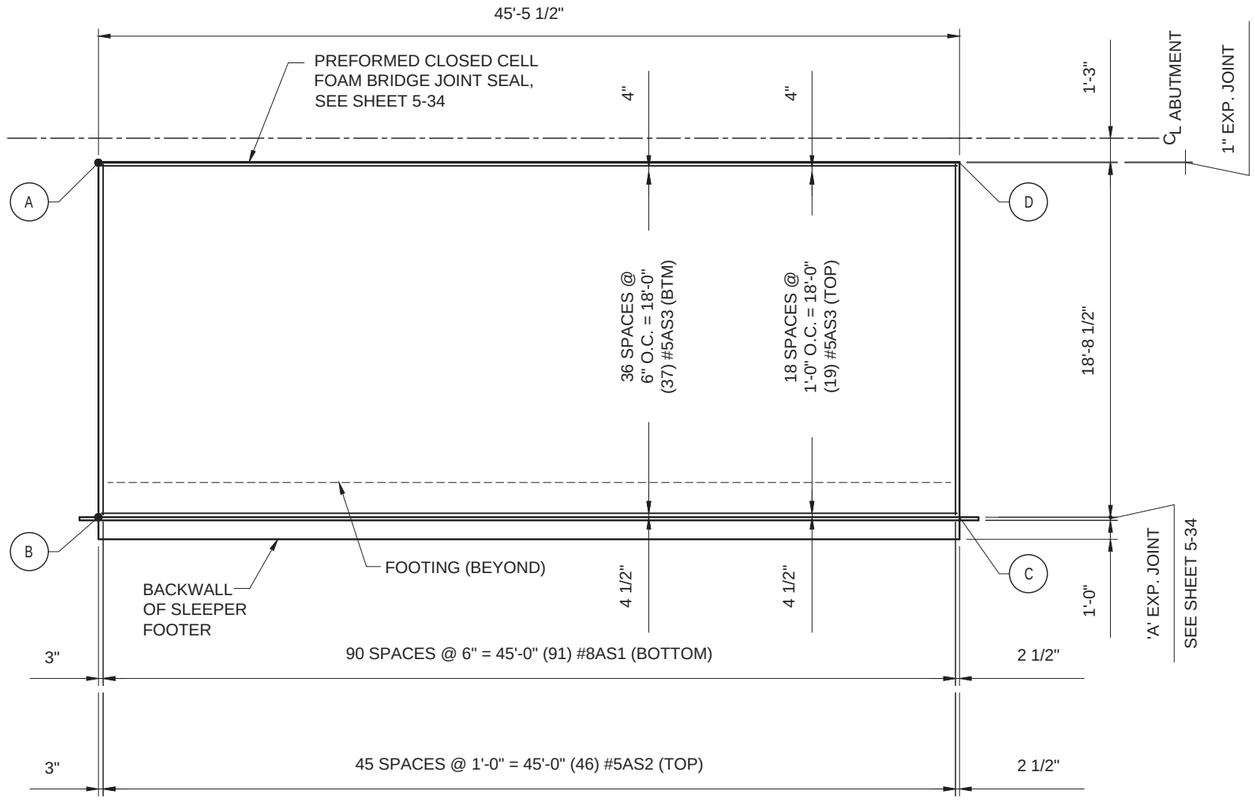

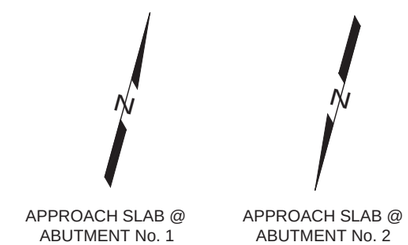

APPROACH SLAB PLAN
(TYPICAL OF 2 LOCATIONS)

APPROACH SLAB ELEVATIONS

	POINT	STATION AND OFFSET	ELEVATION		POINT	STATION AND OFFSET	ELEVATION
ABUTMENT #1	A	STA. 58+18.03, 22.75' LT.	6490.85'	ABUTMENT #2	A	STA. 60+70.61, 22.71' RT.	6494.35'
	B	STA. 57+99.32, 22.75' LT.	6490.66'		B	STA. 60+89.32, 22.71' RT.	6494.54'
	C	STA. 57+99.32, 22.71' RT.	6491.57'		C	STA. 60+89.32, 22.75' LT.	6493.63'
	D	STA. 58+18.03, 22.71' RT.	6491.76'		D	STA. 60+70.61, 22.75' LT.	6493.44'

AMANDA J. WHITE
NEW MEXICO
19215
PROFESSIONAL ENGINEER
10/7/16

NO.	DESCRIPTION	DATE	BY
3			
2			
1			

REVISIONS

NEW MEXICO DEPARTMENT OF TRANSPORTATION

CITY OF GALLUP
ALLISON ROAD
BRIDGE OVER RIO PUERCO
BRIDGE NO. 9718

APPROACH SLAB DETAILS
SHEET 1 OF 3

DESIGNED BY: AJW DRAWN BY: VKL CHECKED BY: GEL
DESIGNED BY: BOHANNAN HUSTON INC. PHONE: 505-823-1000 EMAIL:

Bohannan Huston
www.bhinc.com 800.877.5332

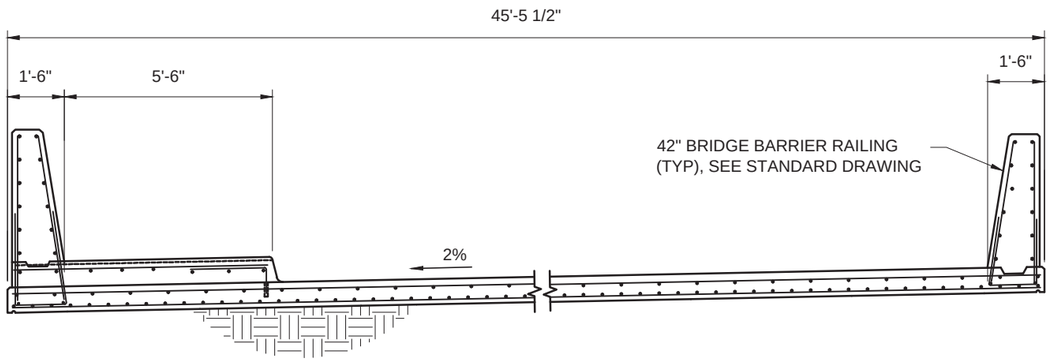

APPROACH SLAB TRANSVERSE SECTION

(LOOKING UPSTATION)

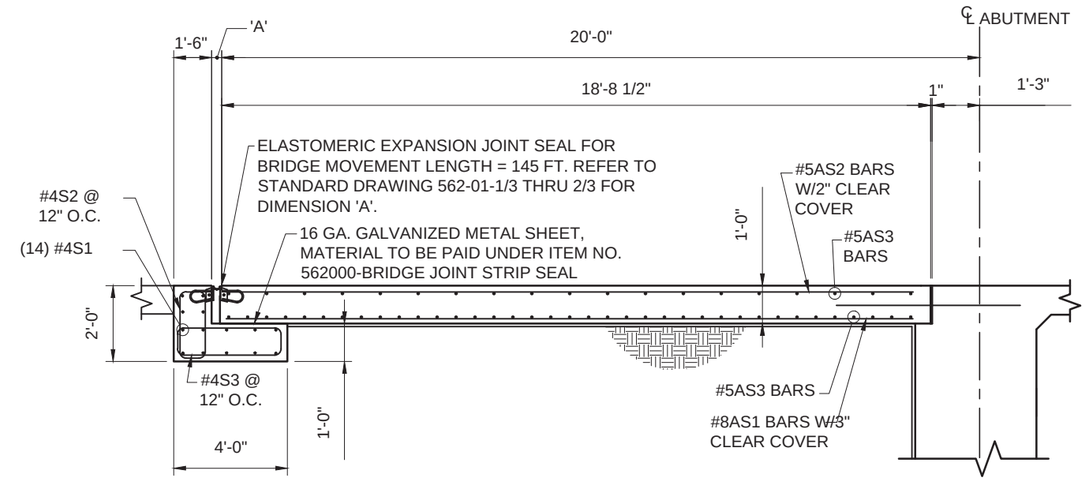

APPROACH SLAB LONGITUDINAL SECTION

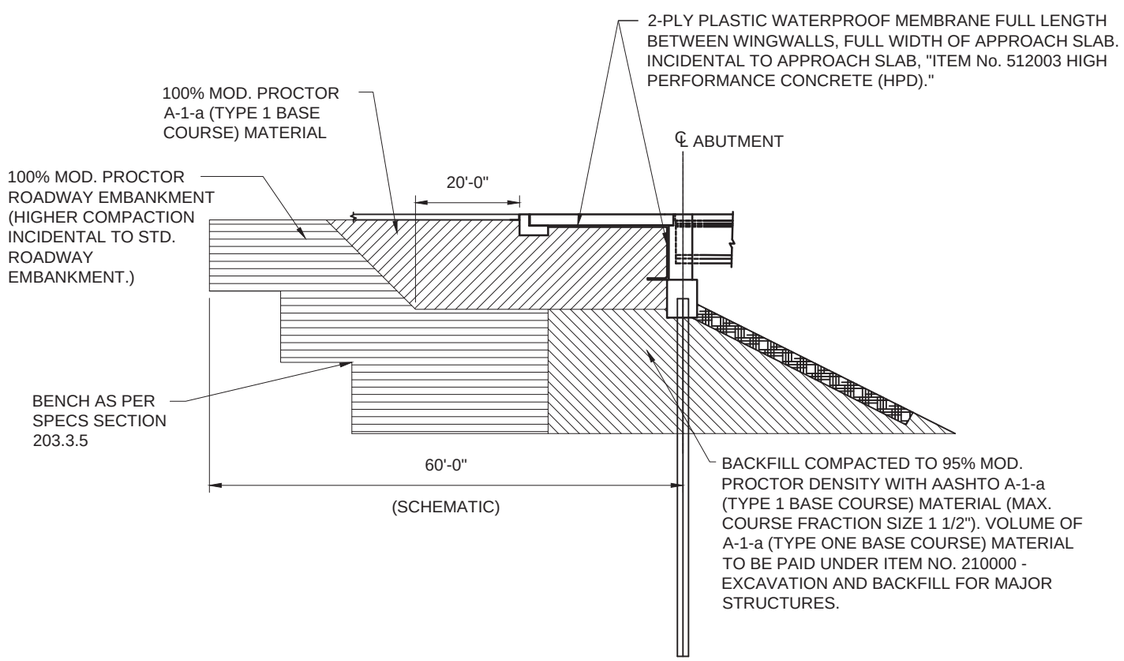

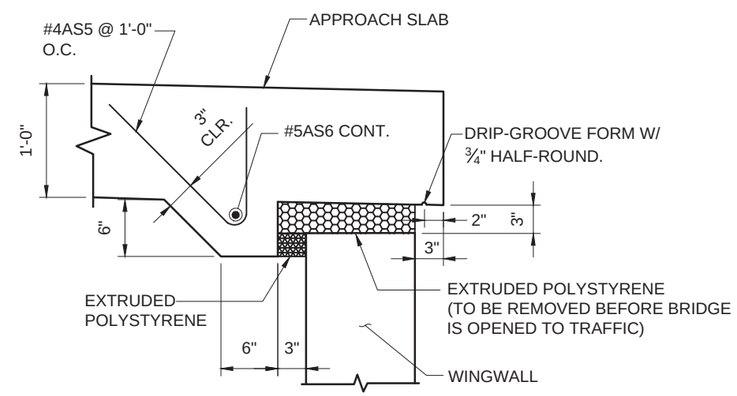

APPROACH SLAB TO WINGWALL JOINT

AMANDA J. WHITE
NEW MEXICO
19215
PROFESSIONAL ENGINEER
10/7/16

NO.	DESCRIPTION	DATE	BY
3			
2			
1			

REVISIONS

NEW MEXICO DEPARTMENT
OF TRANSPORTATION

CITY OF GALLUP
ALLISON ROAD
BRIDGE OVER RIO PUERCO
BRIDGE NO. 9718

APPROACH SLAB DETAILS
SHEET 2 OF 3

DESIGNED BY: BOHANNAN HUSTON INC. PHONE: 505-823-1000 EMAIL:
DESIGNED BY: AJW DRAWN BY: VKL CHECKED BY: GEL

Bohannan Huston
www.bhinc.com 800.877.5332

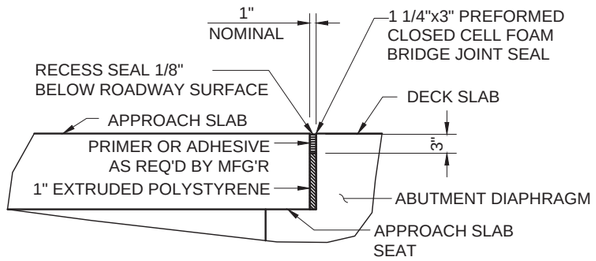

JOINT DETAIL

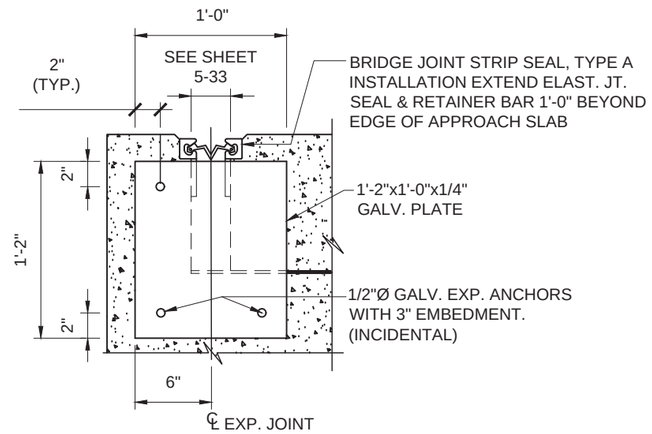

DETAIL 1

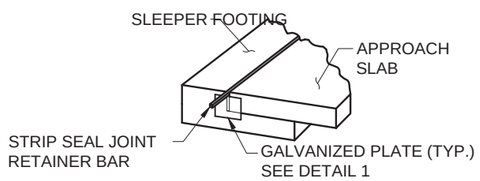

ISOMETRIC VIEW

NOTES

1. ALL DIMENSIONS ARE IN FEET UNLESS OTHERWISE NOTED.
2. CONCRETE FOR APPROACH SLABS AND SLEEPER FOOTERS SHALL BE HIGH PERFORMANCE CONCRETE (HPD).
3. REINFORCING BARS ARE AASHTO SPECIFICATION M-31, GRADE 60. DIMENSIONS ARE TO THE CENTERLINE OF BARS.
4. TOP SURFACES OF THE APPROACH SLABS SHALL BE MACHINE GROOVED IN CONFORMANCE WITH SUBSECTION 512.3.10.3 OF THE STANDARD SPECIFICATIONS.

AMANDA J. WHITE
NEW MEXICO
19215
PROFESSIONAL ENGINEER
10/7/16

NO.	DESCRIPTION	DATE	BY
3			
2			
1			

REVISIONS

NEW MEXICO DEPARTMENT
OF TRANSPORTATION

CITY OF GALLUP
ALLISON ROAD
BRIDGE OVER RIO PUERCO
BRIDGE NO. 9718

APPROACH SLAB DETAILS
SHEET 3 OF 3

DESIGNED BY: BOHANNAN HUSTON INC. PHONE: 505-823-1000 EMAIL:
DESIGNED BY: AJW DRAWN BY: VKL CHECKED BY: GEL

Bohannan Huston
www.bhinc.com 800.877.5332

SCHEDULE OF REINFORCING STEEL FOR WINGWALLS

	MARK	SIZE	LENGTH FEET	LENGTH INCHES	NO REQ'D	BEND DIAGRAM	REMARKS
WW GEN	#4WW1	# 4	19	6	12	1	
	#7WW2	# 7	19	6	12	1	
	#4WW3	# 4	3	10	68	3	A = 1'-6", B = 10"
	#4WW4	# 4	3	9	26	3	A = 1'-6", B = 9"
	#4WW5	# 4	10	11	12	1	
	#4WW6	# 4	11	9	12	1	
	#4WW7	# 4	9	11	4	1	
	#4WW8	# 4	10	9	4	1	
ABUT 1 SB WW	#4WL1	# 4	18	8	1	1	
	THRU	# 4	11	9	9	1	AVERAGE "L" SHOWN, DECREASE EACH BAR BY 16.6"
	#4WL11	# 4	4	10	1	1	
	#7WL12	# 7	18	8	1	1	
	THRU	# 7	11	9	9	1	AVERAGE "L" SHOWN, DECREASE EACH BAR BY 16.6"
	#7WL22	# 7	4	10	1	1	
	#4WT1	# 4	9	2	2	1	
	THRU	# 4	5	4	30	1	AVERAGE "L" SHOWN, DECREASE EACH BAR BY 5.7"
	#4WT17	# 4	1	7	2	1	
	#4WD1	# 4	21	2	2	14	A = 3'-3", B = 16'-2", C = 7'-8"
	#4WL23	# 4	18	8	1	1	
	THRU	# 4	11	8	9	1	AVERAGE "L" SHOWN, DECREASE EACH BAR BY 16.8"
	#4WL33	# 4	4	8	1	1	
	#7WL34	# 7	18	8	1	1	
	THRU	# 7	11	8	9	1	AVERAGE "L" SHOWN, DECREASE EACH BAR BY 16.8"
	#7WL44	# 7	4	8	1	1	
	#4WT18	# 4	10	0	2	1	
	THRU1	# 4	5	9	30	1	AVERAGE "L" SHOWN, DECREASE EACH BAR BY 6.3"
	#4WT34	# 4	1	7	2	1	
	#4WD2	# 4	21	7	2	14	A = 3'-3", B = 16'-2", C = 8'-7"
	#4WL45	# 4	18	2	1	1	
	THRU	# 4	11	6	9	1	AVERAGE "L" SHOWN, DECREASE EACH BAR BY 16"
	#4WL55	# 4	4	10	1	1	
	#7WL56	# 7	18	2	1	1	
	THRU	# 7	11	6	9	1	AVERAGE "L" SHOWN, DECREASE EACH BAR BY 16"
	#7WL66	# 7	4	10	1	1	
	#4WT35	# 4	9	2	2	1	
	THRU	# 4	5	4	30	1	AVERAGE "L" SHOWN, DECREASE EACH BAR BY 5.7"
	#4WT51	# 4	1	7	2	1	
	#4WD3	# 4	21	4	2	14	A = 3'-3", B = 16'-2", C = 8'-0"
ABUT 2 NB WW	#4WL67	# 4	18	7	1	1	
	THRU	# 4	11	7	9	1	AVERAGE "L" SHOWN, DECREASE EACH BAR BY 16.8"
	#4WL77	# 4	4	7	1	1	
	#7WL78	# 7	18	7	1	1	
	THRU	# 7	11	7	9	1	AVERAGE "L" SHOWN, DECREASE EACH BAR BY 16.8"
	#7WL88	# 7	4	7	1	1	
	#4WT52	# 4	10	1	2	1	
	THRU	# 4	5	10	30	1	AVERAGE "L" SHOWN, DECREASE EACH BAR BY 6.4"
	#4WT68	# 4	1	7	2	1	
	#4WD4	# 4	21	9	2	14	A = 3'-3", B = 16'-2", C = 8'-11"

SCHEDULE OF REINFORCING STEEL FOR APPROACH SLAB AND SLEEPER

MARK	SIZE	LENGTH FEET	LENGTH INCHES	NO REQ'D	BEND DIAGRAM	REMARKS
#8AS1 *	# 8	18	0	182	1	
#5AS2 *	# 5	18	0	92	1	
#5AS3 *	# 5	45	0	112	1	
#4AS5 *	# 4	2	4	76	10	A = 1'-0", B = 1'-4"
#5AS6 *	# 5	18	0	4	1	
#4S1 *	# 4	45	0	28	1	
#4S2 *	# 4	6	0	92	9	A = 1'-7", B = 1'-2"", C = 6"
#4S3 *	# 4	9	0	92	9	A = 3'-8", B = 7", C = 6"

* DENOTES EPOXY COATED BAR

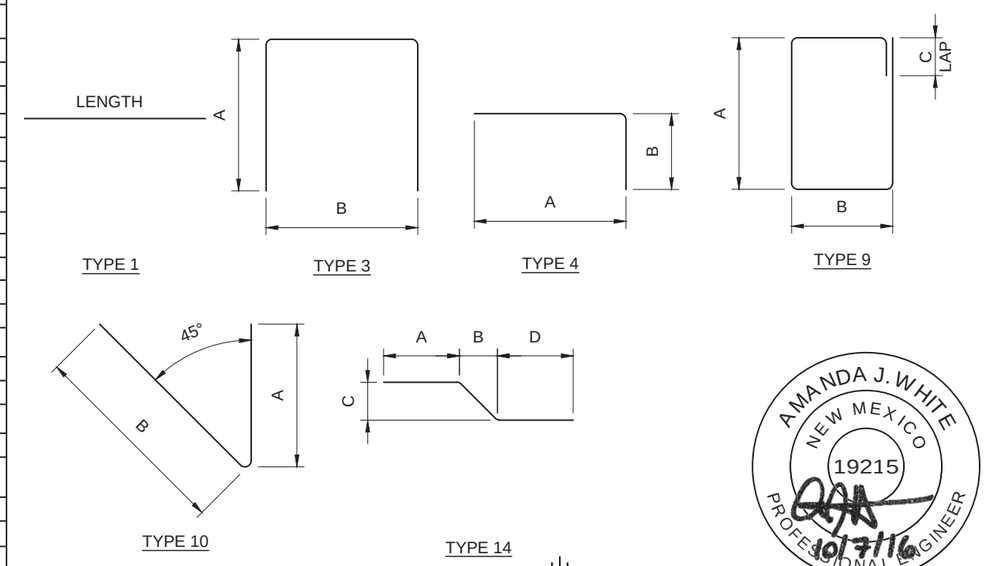

BAR SIZE	USE	MIMIMUM 'R'
#4 & #5	GENERAL	6.0 d_b
#4 & #5	STIRRUPS AND TIES	4.0 d_b
#6 THRU #8	GENERAL	6.0 d_b
#9 THRU #11	GENERAL	8.0 d_b

d_b = BAR DIAMETER

AMANDA J. WHITE
NEW MEXICO
19215
PROFESSIONAL ENGINEER
10/7/16

NO.	DESCRIPTION	DATE	BY
3			
2			
1			

REVISIONS

NEW MEXICO DEPARTMENT OF TRANSPORTATION

CITY OF GALLUP
ALLISON ROAD
BRIDGE OVER RIO PUERCO
BRIDGE NO. 9718

REINFORCING SCHEDULES

DESIGNED BY: BOHANNAN HUSTON INC. PHONE: 505-823-1000 EMAIL:
DESIGNED BY: AJW DRAWN BY: VKL CHECKED BY: GEL

SUGGESTED SEQUENCE OF CONSTRUCTION

PRIOR TO BEGINNING CONSTRUCTION, INSTALL ALL ADVANCE PROJECT SIGNING. INSTALL SIGN SP-1 PER NMDOT STANDARD DRAWING 702-03-1/1 . REPLACE NMDOT LOGO WITH THE CITY OF GALLUP LOGO. SEE SHEET 6-2 FOR PLACEMENT OF THE SIGNS. PORTABLE MESSAGE BOARDS SHALL BE INSTALLED TWO WEEKS PRIOR TO THE START OF CONSTRUCTION NOTIFYING THE PUBLIC OF UPCOMING CLOSURES.

PHASE 1:
CLOSE ALLISON RD AT WAREHOUSE LANE AND AT THE INTERSECTION WITH MALONEY. PLACE ALL DETOUR SIGNAGE AS SHOWN ON SHEET 6-2. CONSTRUCT BRIDGE AND ROADWAY. REOPEN ROAD TO TRAFFIC.

PHASE 2:
REMOVE EXISTING BRIDGE DECK AND OBLITERATE OLD ALLISON ROADWAY PER DETAIL SECTION 2.

SUMMARY OF QUANTITIES

ITEM NO.	DESCRIPTION	UNIT	QUANTITY
702000	CONSTRUCTION SIGNING	SQ.FT.	230
702100	STEEL POSTS AND BASE POSTS FOR CONSTRUCTION SIGNING	LIN. FT.	465
702238	BARRICADE, TYPE III - 8'	EACH	5
702610	PORTABLE CHANGEABLE MESSAGE SIGNS	EACH	3

SIGNING QUANTITIES

	702000		702100			702238	702610
			MOUNTING REQUIREMENTS				
			POST	BASE POST		BARRICADES	PORTABLE
SIGN CODE	NO. OF SIGNS	TOTAL SIGN AREA (SF)	TOTAL LENGTH	NO.	TOTAL LENGTH	TYPE III 8 FT	CHANGEABLE MESSAGE SIGN
PHASE 1 BOP / EOP SIGNING						**5**	**3**
* SP - 1	3	97.5	99	9	31.5		
R11-2-48	4	40	POST TO TYPE III				
R11-4-60	1	12.5	POST TO TYPE III				
W20-1a-36	1	9	22	2	7		
W20-3a-36	2	18	44	4	14		
M4-9U-30	2	15	20	2	7		
M4-9L-30	3	15	30	3	10.5		
M4-9R-30	4	20	40	4	14		
M4-8a-24	2		20	2	7		
TOTAL		227	275	26	91	5	3
USE		230	370		95	5	3

* REPLACE NMDOT SYMBOL ON SP-1 WITH CITY OF GALLUP

NO.	DESCRIPTION	DATE	BY
6			
5			
4			
3			
2			
1			

REVISIONS (OR CHANGE NOTICES)

CITY OF GALLUP

TRAFFIC CONTROL GENERAL NOTES & SUGGESTED SEQUENCE OF CONSTRUCTION

DESIGNED BY: BOHANNAN HUSTON PHONE: 505-823-1000 EMAIL:

PROJECT CONTROL NUMBER 6100112

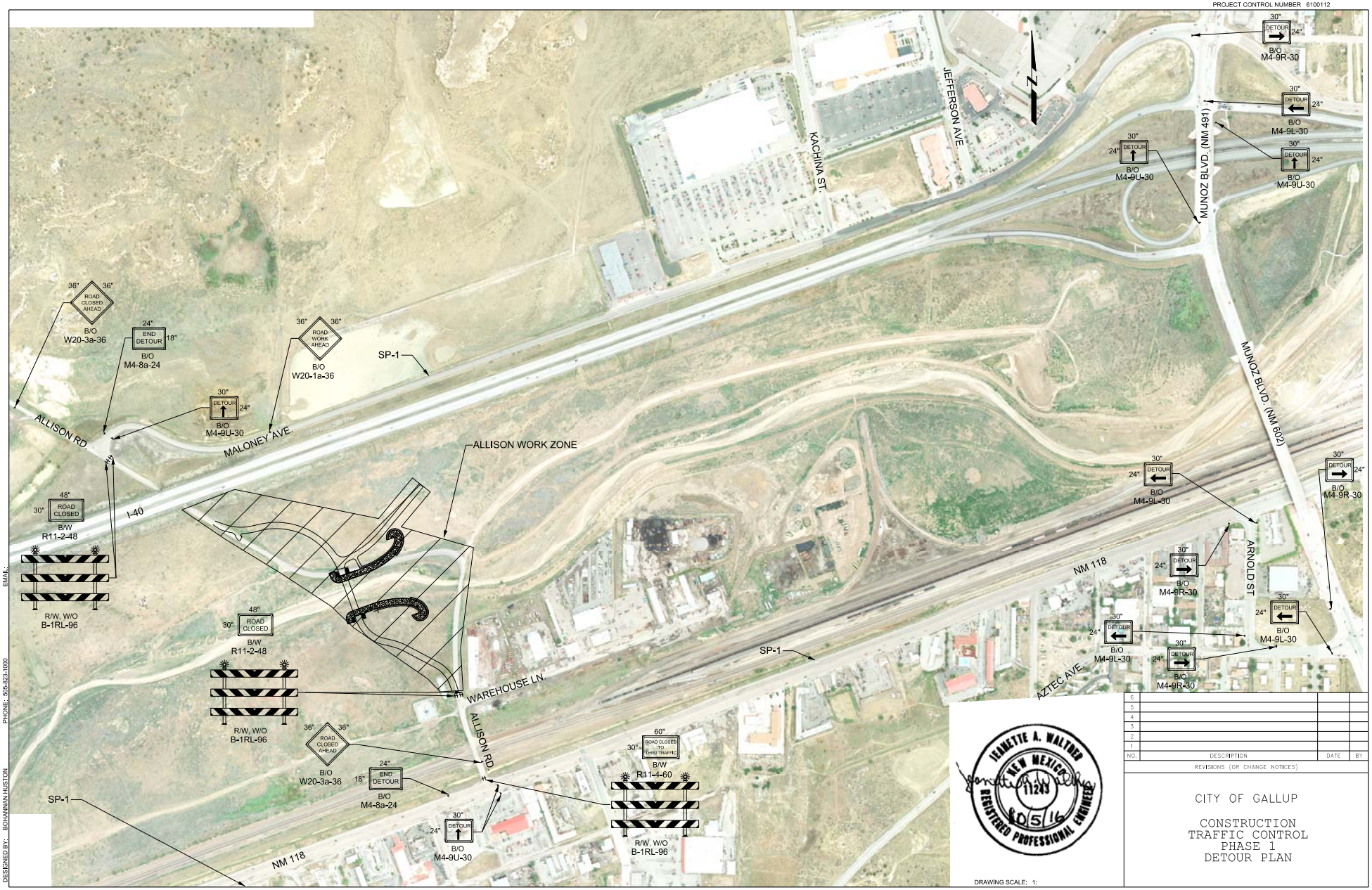

NO.	DESCRIPTION	DATE	BY
6			
5			
4			
3			
2			
1			

REVISIONS (OR CHANGE NOTICES)

JEANETTE A. WALTERS
NEW MEXICO
11243
8/5/16
REGISTERED PROFESSIONAL ENGINEER

CITY OF GALLUP

CONSTRUCTION
TRAFFIC CONTROL
PHASE 1
DETOUR PLAN

DRAWING SCALE: 1:

DESIGNED BY: BOHANNAN HUSTON PHONE: 505-823-1000 EMAIL:

$usernome$
$DATE$ $$time$$ Design File: $FILEL$

DESIGNED BY:

NEW MEXICO PROJECT NO.

SHEET NO. 6 - 2

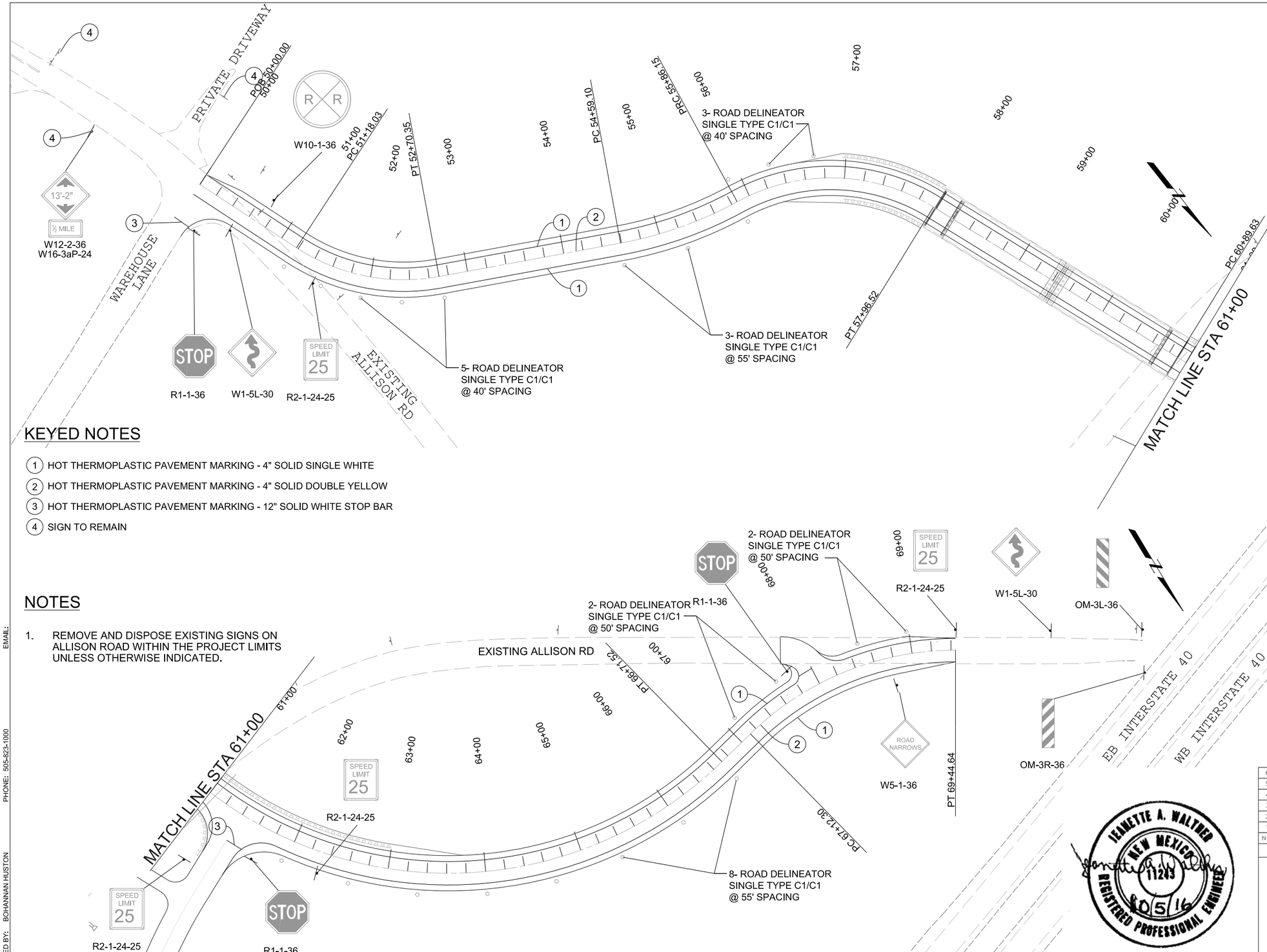

KEYED NOTES

1. HOT THERMOPLASTIC PAVEMENT MARKING - 4" SOLID SINGLE WHITE
2. HOT THERMOPLASTIC PAVEMENT MARKING - 4" SOLID DOUBLE YELLOW
3. HOT THERMOPLASTIC PAVEMENT MARKING - 12" SOLID WHITE STOP BAR
4. SIGN TO REMAIN

NOTES

1. REMOVE AND DISPOSE EXISTING SIGNS ON ALLISON ROAD WITHIN THE PROJECT LIMITS UNLESS OTHERWISE INDICATED.

NO.	DESCRIPTION	DATE	BY
6			
5			
4			
3			
2			
1			

REVISIONS (OR CHANGE NOTICES)

JEANETTE A. WALTHER
NEW MEXICO
11243
REGISTERED PROFESSIONAL ENGINEER
10/5/16

CITY OF GALLUP

PERMANENT
SIGNING & STRIPING
SHEET

DRAWING SCALE: 1:

DESIGNED BY: BOHANNAN HUSTON
PHONE: 505-823-1000
EMAIL:

nsalazar
10/4/2016 4:27:19 PM
Design File: P:\20100245\Priority 1\PLANS\C7G801Priority1_PS01.dgn

DESIGNED BY:
NEW MEXICO PROJECT NO.

701000 - PANEL SIGNS

701100- STEEL POST & BASE POST FOR ALUMINUM PANEL SIGN

SIGN CODE	NO. OF SIGNS	TOTAL SIGN	POST LENGTHS (FT)				SQUARE TUBING	U CHANNEL	SQUARE TUBING 12 GAL				BASE POSTS	
			RIGHT	CENTER	LEFT	TOTAL	FLANGE	4	1.75	2	2.25	2.5	NO.	TOTAL LENGTH FT
		SQ FT					2.50	LBS/FT	IN SQ	IN SQ	IN SQ	IN SQ		
R1-1-36	3	27.00		10.0		30.0					X		3	10.5
R2-1-24-25	4	12.00		9.5		38.0					X		4	14.0
W5-1-36	1	9.00		10.0		10.0					X		1	3.5
W10-1-36	1	9.00		10.0		10.0					X		1	3.5
W1-5L-36	2	18.00		10.0		20.0					X		2	7.0
TOTAL		**75.00**				**108.00**	**FT**							**38.50**

SUMMARY OF QUANTITIES

ITEM NO.	DESCRIPTION	UNITS	TOTAL	USE
701000	PANEL SIGNS	SQ FT	75	80
701100	STEEL POST & BASE POST FOR ALUMINUM PANEL SIGNS	FT	147	150
703003	OBJECT MARKER TYPE 3	EACH	2	2
703100	ROAD DELINEATOR TYPE GUIDE	EACH	23	23
704700	HOT THERMOPLASTIC PAVEMENT MARKINGS 4"	LF	12360	12400
704701	HOT THERMOPLASTIC PAVEMENT MARKINGS 6"	LF	200	200

DESIGNED BY: BOHANNAN HUSTON PHONE: 505-823-1000 EMAIL:

NO.	DESCRIPTION	DATE	BY
6			
5			
4			
3			
2			
1			

REVISIONS (OR CHANGE NOTICES)

CITY OF GALLUP

PERMANENT
SIGNING & STRIPING
QUANTITY & DETAIL SHEET

DRAWING SCALE: 1:

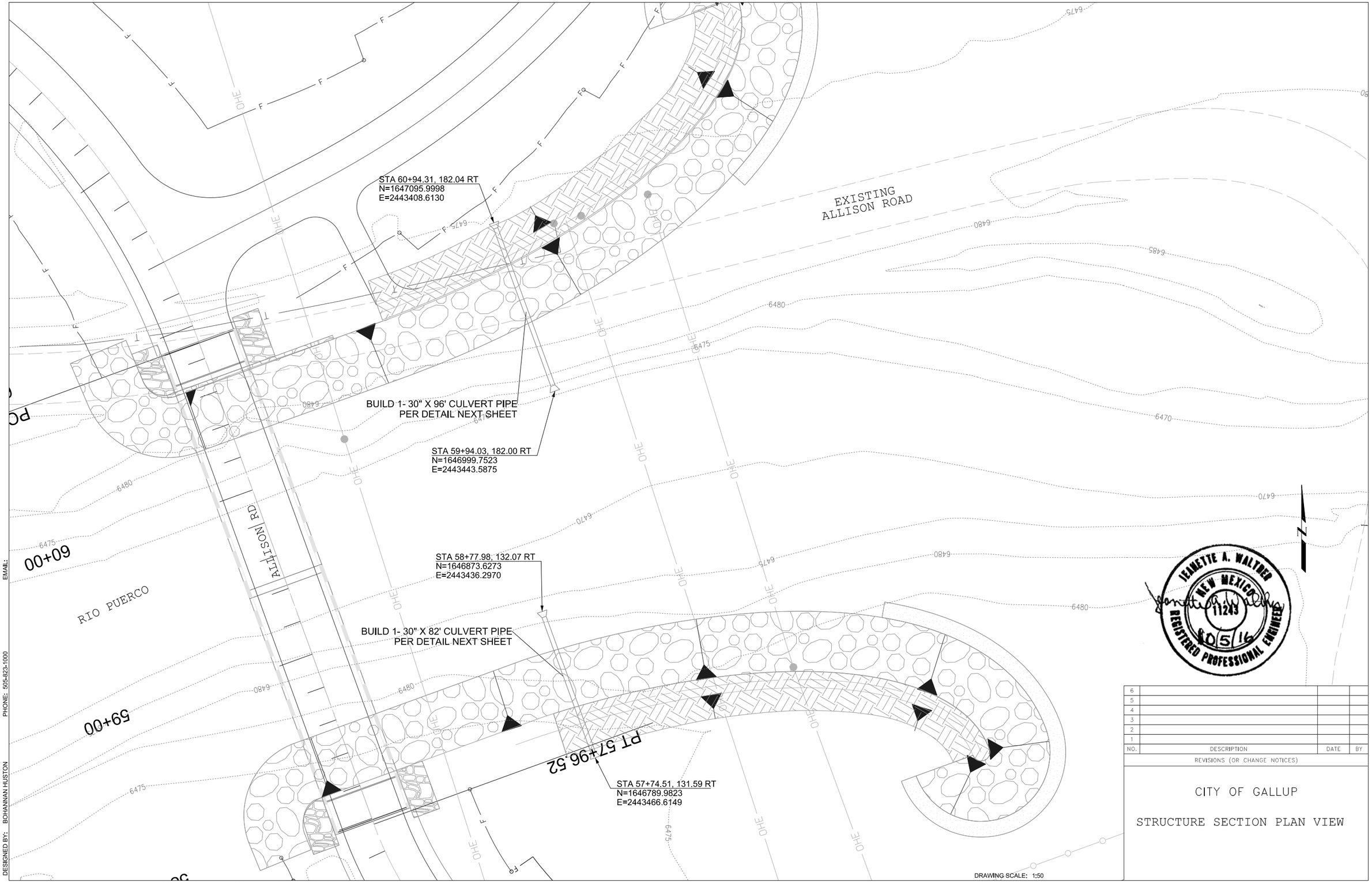

NO.	DESCRIPTION	DATE	BY
6			
5			
4			
3			
2			
1			

REVISIONS (OR CHANGE NOTICES)

CITY OF GALLUP

STRUCTURE SECTION PLAN VIEW

DRAWING SCALE: 1:50

DESIGNED BY: BOHANNAN HUSTON
PHONE: 505-823-1000
EMAIL:

nsalazar
10/4/2016 4:30:53 PM
Design File: P:\20100245\Priority 1\PLANS\C7G801Priority1_SP Plan.dgn

DESIGNED BY:
NEW MEXICO PROJECT NO.

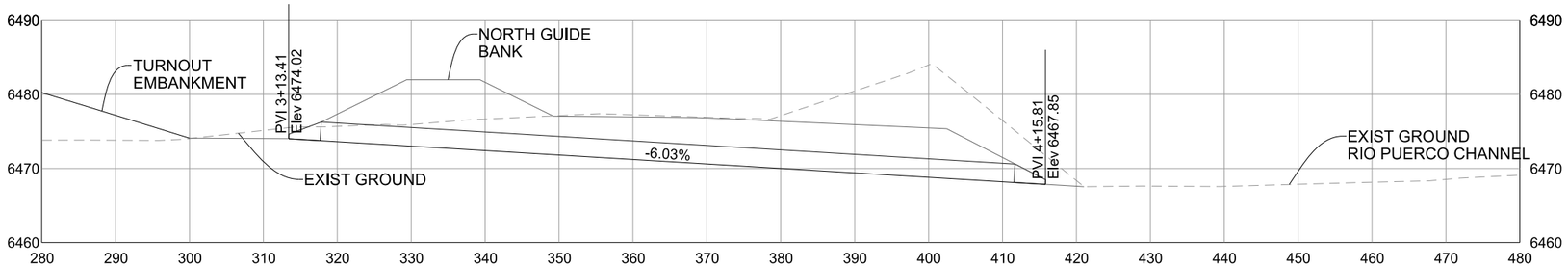

NORTH GUIDE BANK
BUILD 1- 30"X96' CULVERT PIPE
BUILD END SECTION LT & RT
SERIALS: 206-01-1/1, 206-03-1/1, 206-05-1/1, 206-07-1/1, 511-11-1/2, 570-02-1/2, 570-02-2/2

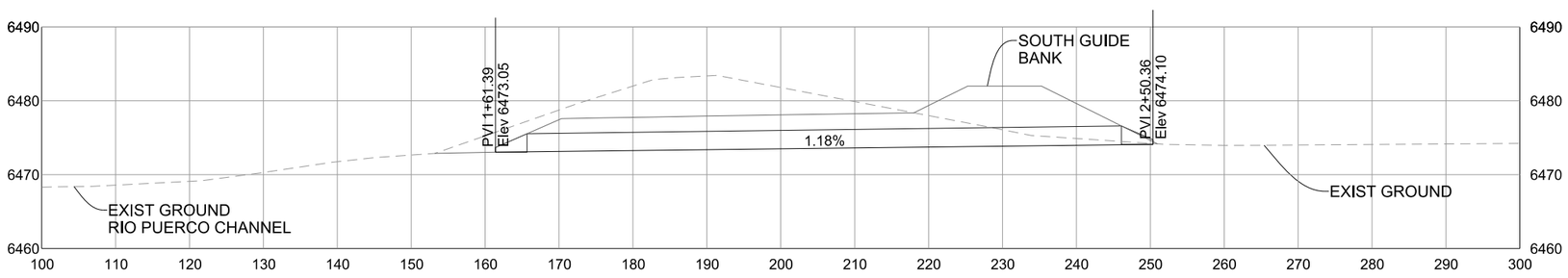

SOUTH GUIDE BANK
BUILD 1- 30"X82' CULVERT PIPE
BUILD END SECTION LT & RT
SERIALS: 206-01-1/1, 206-03-1/1, 206-05-1/1, 206-07-1/1, 511-11-1/2, 570-02-1/2, 570-02-2/2

DESIGNED BY: BOHANNAN HUSTON PHONE: 505-823-1000 EMAIL:

JEANETTE A. WALTHER
NEW MEXICO
11243
10/5/16
REGISTERED PROFESSIONAL ENGINEER

NO.	DESCRIPTION	DATE	BY
6			
5			
4			
3			
2			
1			

REVISIONS (OR CHANGE NOTICES)

CITY OF GALLUP

STRUCTURE PLACEMENT SHEET

DRAWING SCALE: 1:20

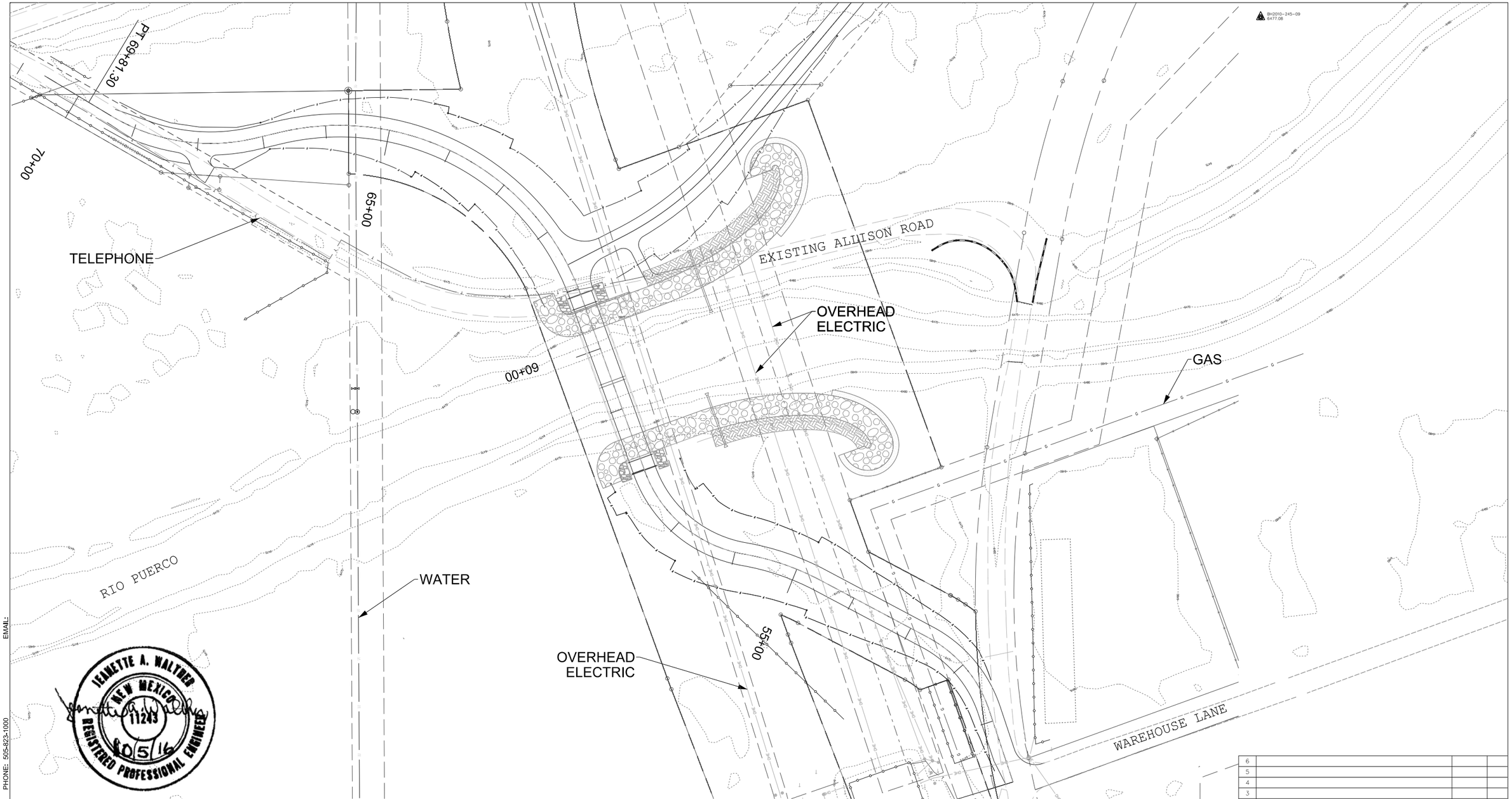

UTILITY CONTACTS

COMPANY	CONTACT	PHONE	CELL	EMAIL
Century Link	Danny Stokes	505-782-5464	505-409-0246	Danny.Stokes@CenturyLink.com
NM Gas	Jose Pinedo		505-264-1762	
NM Gas	Irma Bustamante	505-796-2897		Irma.Bustamante@nmgco.com
Gallup Water and Sanitation Dept	Gary Munn	505-863-1289		gmunn@gallupnm.gov
Gallup Electric	Richard Matzke	505-863-1289		rmatzke@gallupnm.gov
Continental Divide Electric Cooperative, Inc	Jose C. Molina	505-285-6656		jmolina@cdec.coop

NO.	DESCRIPTION	DATE	BY
6			
5			
4			
3			
2			
1			

REVISIONS (OR CHANGE NOTICES)

CITY OF GALLUP

EXISTING UTILITIES

DRAWING SCALE: 1:150

DESIGNED BY: BOHANNAN HUSTON
PHONE: 505-823-1000
EMAIL:

TABLE 1-R

HELICAL CORRUGATED STEEL PIPE-2 2/3" X 1/2" CORRUGATION

DIAMETER OF PIPE (INCHES)	MAX. DEPTH OF COVER ABOVE TOP OF PIPE (FEET)						MIN. CVR (INCHES)
	15	16-20	21-25	26-30	31-35	36-40	
	SPECIFIED WALL THICKNESS (INCH)						
12	0.064	0.064	0.064	0.064	0.064	0.064	12
18	0.064	0.064	0.064	0.064	0.064	0.064	12
24	0.064	0.064	0.064	0.064	0.064	0.064	12
30	0.064	0.064	0.064	0.064	0.064	0.064	12
36	0.064	0.064	0.064	0.064	0.064	0.064	12
42	0.064	0.064	0.064	0.064	0.064	0.064	12
48	0.064	0.064	0.064	0.064	0.064	0.064	12
54	0.079	0.079	0.079	0.079	0.079	0.079	12
60	0.109	0.109	0.109	0.109	0.109	0.109	12
66	0.138	0.138	0.138	0.138	0.138	0.138	12
72	0.138	0.138	0.138	0.138	0.138	0.138	12
78	0.168	0.168	0.168	0.168	0.168	0.168	12
84	0.168	0.168	0.168	0.168	0.168	0.168	12

TABLE 2-R

HELICAL CORRUGATED STEEL PIPE - 3" X 1" CORRUGATION

DIAMETER OF PIPE (INCHES)	MAX. DEPTH OF COVER ABOVE TOP OF PIPE (FEET)						MIN. CVR (INCHES)
	15	16-20	21-25	26-30	31-35	36-40	
	SPECIFIED WALL THICKNESS (INCH)						
54	0.064	0.064	0.064	0.064	0.064	0.064	12
60	0.064	0.064	0.064	0.064	0.064	0.064	12
66	0.064	0.064	0.064	0.064	0.064	0.064	12
72	0.064	0.064	0.064	0.064	0.064	0.079	12
78	0.064	0.064	0.064	0.064	0.064	0.079	12
84	0.064	0.064	0.064	0.064	0.079	0.079	12
90	0.064	0.064	0.064	0.064	0.079	0.109	12
96	0.079	0.079	0.079	0.079	0.079	0.109	12
102	0.079	0.079	0.079	0.079	0.109	0.109	18
108	0.109	0.109	0.109	0.109	0.109	0.109	18
114	0.109	0.109	0.109	0.109	0.109	0.109	18
120	0.109	0.109	0.109	0.109	0.109	0.109	18
126	0.138	0.138	0.138	0.138	0.138	0.138	18
132	0.138	0.138	0.138	0.138	0.138	0.138	18
138	0.138	0.138	0.138	0.138	0.138	0.138	18
144	0.168	0.168	0.168	0.168	0.168	0.168	18

TABLE 3-R

HELICAL CORRUGATED STEEL PIPE - 5" X 1" CORRUGATION

DIAMETER OF PIPE (INCHES)	MAX. DEPTH OF COVER ABOVE TOP OF PIPE (FEET)						MIN. CVR (INCHES)
	15	16-20	21-25	26-30	31-35	36-40	
	SPECIFIED WALL THICKNESS (INCH)						
54	0.064	0.064	0.064	0.064	0.064	0.064	12
60	0.064	0.064	0.064	0.064	0.064	0.064	12
66	0.064	0.064	0.064	0.064	0.064	0.079	12
72	0.064	0.064	0.064	0.064	0.064	0.079	12
78	0.064	0.064	0.064	0.064	0.079	0.079	12
84	0.064	0.064	0.064	0.079	0.079	0.109	12
90	0.064	0.064	0.064	0.079	0.079	0.109	12
96	0.079	0.079	0.079	0.079	0.109	0.109	12
102	0.079	0.079	0.079	0.079	0.109	0.109	18
108	0.109	0.109	0.109	0.109	0.109	0.109	18
114	0.109	0.109	0.109	0.109	0.109	0.138	18
120	0.109	0.109	0.109	0.109	0.109	0.138	18
126	0.138	0.138	0.138	0.138	0.138	0.138	18
132	0.138	0.138	0.138	0.138	0.138	0.138	18
138	0.138	0.138	0.138	0.138	0.138	0.138	18
144	0.168	0.168	0.168	0.168	0.168	0.168	18

NOTES:
1. BACKFILL AROUND PIPE MUST BE COMPACTED TO SPECIFIED AASHTO T-99 DENSITY OF 100%.
2. USE REASONABLE CARE IN HANDLING AND INSTALLATION.

TABLE 4-R

STEEL SPIRAL RIB PIPE - 3/4" X 3/4" X 7 1/2"

DIAMETER OF PIPE (INCHES)	MAX. DEPTH OF COVER ABOVE TOP OF PIPE (FEET) 3/4" X 3/4" X 7 1/2" CORRUGATION				MIN. CVR (INCHES)
	0.064	0.079	0.109	0.138	
24	67	95	158		12
30	54	75	126		12
36	45	63	105		12
42	38	54	90		12
48	*33	47	78	114	12
54	29	41	70	101	15
60		37	63	91	15
66		*34	57	83	18
72			52	76	18
78			48	70	21
84			*44	65	21
90				60	24
96				*56	24
102				*50	27

TABLE 5-R

STEEL SPIRAL RIB PIPE - 3/4" X 1" X 11 1/2"

DIAMETER OF PIPE (INCHES)	MAX. DEPTH OF COVER ABOVE TOP OF PIPE (FEET) 3/4" X 1" X 11 1/2" CORRUGATION			MIN. CVR (INCHES)
	0.064	0.079	0.109	
24	40	40	40	12
30	39	40	40	12
36	32	40	40	12
42	28	39	40	12
48	24	34	40	12
54	21	30	40	18
60		27	40	18
66		25	40	18
72		*22	38	18
78			35	24
84			33	24
90			*31	24

NOTES:
1. FOR TABLES 4-R AND 5-R, COVER LIMITS INDICATED WITH * ARE FOR TRENCH INSTALLATION ONLY. FOR EMBANKMENT CONDITIONS, USE NEXT HEAVIER GAGE IF AVAILABLE.
2. SEE "INSTALLATION AND BACKFILL OF SPIRAL RIB PIPE" SECTION OF "HANDBOOK OF STEEL DRAINAGE & HIGHWAY CONSTRUCTION PRODUCTS" BY AISI OF 1994 EDITION FOR MORE DETAILS ON INSTALLATION.

GAUGE	THICKNESS (INCHES)
1	0.280
3	0.249
5	0.218
7	0.188
8	0.168
10	0.138
12	0.109
14	0.079
16	0.064
18	0.052

NOTE:
GAUGES SHOWN ARE "US STANDARD GAUGE" FOR UNCOATED STEEL SHEETS AND PLATES. THICKNESS SHOWN IN INCHES INCLUDE GALVANIZED COATING.

R = ROUND PIPE

DESIGN DATA:

SPECIFICATIONS: AASHTO LRFD BRIDGE DESIGN SPECIFICATIONS SECTION 12, 2007 EDITION, WITH 2008 INTERIM REVISIONS.

DEAD LOAD: 120 POUNDS PER CUBIC FOOT EARTH.

LIVE LOAD: HL-93

SAFETY FACTORS: APPROXIMATELY, 3.0 FOR LONGITUDINAL SEAM STRENGTH 2.0, FOR PIPE WALL BUCKLING.

BACKFILL: SOIL STIFFNESS COEFFICIENT (k) = 0.22.

◐ DENOTES THAT THE FURNISHED TABLE IS STILL BASED ON DESIGN SPECIFICATION OF LFD, NOT LRFD YET.

◐ TABLE 6-R

STRUCTURAL PLATE PIPE - 6" X 2" CORRUGATION

DIAMETER OF PIPE (FEET)	MAX. DEPTH OF COVER ABOVE TOP OF PIPE (FEET)						MIN. CVR (INCHES)
	15	16-20	21-25	26-30	31-35	36-40	
	SPECIFIED WALL THICKNESS (INCH)						
5.0	0.111	0.111	0.111	0.111	0.111	0.111	12
5.5	0.111	0.111	0.111	0.111	0.111	0.111	12
6.0	0.111	0.111	0.111	0.111	0.111	0.111	12
6.5	0.111	0.111	0.111	0.111	0.111	0.111	12
7.0	0.111	0.111	0.111	0.111	0.111	0.111	12
7.5	0.111	0.111	0.111	0.111	0.111	0.111	12
8.0	0.111	0.111	0.111	0.111	0.111	0.111	12
8.5	0.111	0.111	0.111	0.111	0.111	0.111	18
9.0	0.111	0.111	0.111	0.111	0.111	0.111	18
9.5	0.111	0.111	0.111	0.111	0.111	0.111	18
10.0	0.111	0.111	0.111	0.111	0.111	0.111	18
10.5	0.111	0.111	0.111	0.111	0.111	0.140	18
11.0	0.111	0.111	0.111	0.111	0.111	0.140	18
11.5	0.111	0.111	0.111	0.111	0.111	0.140	18
12.0	0.111	0.111	0.111	0.111	0.111	0.140	18
12.5	0.111	0.111	0.111	0.111	0.111	0.140	24
13.0	0.111	0.111	0.111	0.111	0.111	0.140	24
13.5	0.111	0.111	0.111	0.111	0.140	0.140	24
14.0	0.111	0.111	0.111	0.111	0.140	0.140	24
14.5	0.111	0.111	0.111	0.111	0.140	0.140	24
15.0	0.111	0.111	0.111	0.140	0.140	0.140	24
15.5	0.111	0.111	0.111	0.140	0.140	0.170	24
16.0	0.111	0.111	0.111	0.140	0.140	0.170	24
16.5	0.140	0.140	0.140	0.140	0.140	0.170	30
17.0	0.140	0.140	0.140	0.140	0.140	0.170	30
17.5	0.140	0.140	0.140	0.140	0.140	0.170	30
18.0	0.140	0.140	0.140	0.140	0.140	0.170	30
18.5	0.170	0.170	0.170	0.170	0.170	0.170	30
19.0	0.170	0.170	0.170	0.170	0.170	0.188	30
19.5	0.170	0.170	0.170	0.170	0.170	0.188	30
20.0	0.170	0.170	0.170	0.170	0.170	0.188	30
20.5	0.188	0.188	0.188	0.188	0.188	0.218	36
21.0	0.188	0.188	0.188	0.188	0.188	0.218	36
21.5	0.218	0.218	0.218	0.218	0.218	0.218	36
22.0	0.218	0.218	0.218	0.218	0.218	0.249	36
22.5	0.218	0.218	0.218	0.218	0.218	0.249	36
23.0	0.218	0.218	0.218	0.218	0.218	0.249	36
23.5	0.249	0.249	0.249	0.249	0.249	0.249	36
24.0	0.249	0.249	0.249	0.249	0.249	0.280	42
24.5	0.249	0.249	0.249	0.249	0.249	0.280	42
25.0	0.280	0.280	0.280	0.280	0.280	0.280	42
25.5	0.280	0.280	0.280	0.280	0.280	0.280	42
26.0	0.280	0.280	0.280	0.280	0.280	0.280	42

NOTES:
1. BACKFILL AROUND PIPE MUST BE COMPACTED TO SPECIFIED AASHTO T-99 DENSITY OF 100%.
2. USE REASONABLE CARE IN HANDLING AND INSTALLATION.

GENERAL NOTES:

1. WHERE ABRASIVE OR CORROSIVE CONDITIONS EXIST, A HEAVIER WALL THICKNESS OR A PROTECTIVE COATING MAY BE REQUIRED. SEE SECTION 570 OF SPECIFICATIONS FOR CORROSION RESISTANCE NUMBER.
2. THE CONTRACTOR MAY FURNISH A HEAVIER WALL THICKNESS THAN THE MINIMUM SHOWN IN THE TABLES AT NO ADDITIONAL COST TO THE DEPARTMENT.
3. ALL PIPES SHALL BE PROTECTED BY A COVER OF AT LEAST 4 FEET BEFORE PERMITTING HEAVY CONSTRUCTION EQUIPMENT TO PASS OVER THEM DURING CONSTRUCTION.
4. MINIMUM COVERS SHOWN IN THE TABLES SHALL BE MEASURED FROM THE TOP OF THE PIPE TO THE BOTTOM OF THE THE FLEXIBLE PAVEMENT OR TO THE TOP OF THE RIGID PAVEMENT. FOR MINIMUM COVERS, A MINIMUM 6" CUSHION OF BACKFILL MATERIAL SHALL BE PROVIDED BETWEEN THE BOTTOM OF THE RIGID PAVEMENT AND THE TOP OF THE PIPE.
5. ALL STEEL CORRUGATED METAL AND AND STRUCTURAL PLATE SHALL CONFORM TO AASHTO SPECIFICATION M-36 AND M-167.
8. ALL PIPES ARE TO BE CAMBERED TO ACCOMMODATE SOIL SETTLEMENT AND CONSOLIDATION. THE AMOUNT OF CAMBER WILL DEPEND ON SOIL CHARACTERISTICS, COVER, LENGTH OF CULVERT, SLOPE, AND OTHER FACTORS AND SHALL BE APPROVED BY THE PROJECT MANAGER.
9. SEE 206-07-1/1 - CORRUGATED METAL CULVERT AND PIPE ARCHES BEDDING AND BACKFILL DETAILS FOR INSTALLATION.
10. SEE SECTION 570 PIPE CULVERT SPECIFICATIONS AND SECTION 571 STRUCTURAL PLATE STRUCTURES SPECIFICATIONS.
6. FOR PIPE SIZES NOT SHOWN, THE GAUGE WILL BE THAT REQUIRED BY THE MINIMUM AND MAXIMUM COVERS FOR THE NEXT LARGER TABULATED PIPE SIZE.
7. COVER HEIGHTS OVER 40 FEET SHALL BE USED ONLY AFTER A THOROUGH INVESTIGATION OF THE FOUNDATION MATERIALS.

TIMOTHY A. MARRS
NEW MEXICO
14072
REGISTERED PROFESSIONAL ENGINEER
4-10-12

	DATE	BY	DESCRIPTION

REVISIONS (OR CHANGE NOTICES)

NEW MEXICO
DEPARTMENT OF TRANSPORTATION
STANDARD DRAWING

MAXIMUM AND MINIMUM COVER
STEEL-ROUND PIPES
HELICAL CORRUGATED METAL
AND
STRUCTURAL PLATES

DESIGNED BY: DRAWN BY: SKL CHECKED BY: YML/TM

206-03-1/1 1 of 1

TABLE 7–A

HELICAL CORRUGATED STEEL PIPE, PIPE–ARCH
2 2/3" x 1/2" CORRUGATION

EQUIV. DIAMETER (INCHES)	SPAN (INCHES)	RISE (INCHES)	MINIMUM THICKNESS REQUIRED (INCH)	MAXIMUM DEPTH OF COVER (FT.) OVER PIPE–ARCH FOR SOIL BEARING CAPACITIES IN 2 TONS/SQ. FT.	MINIMUM COVER (INCHES)
15	17	13	0.064	13	12
18	21	15	0.064	12	12
21	24	18	0.064	13	12
24	28	20	0.064	12	12
30	35	24	0.064	12	12
36	42	29	0.064	12	12
42	49	33	0.079	12	12
48	57	38	0.109	12	12
54	64	43	0.109	12	12
60	71	47	0.138	12	12
66	77	52	0.168	12	12
72	83	57	0.168	12	12

TABLE 8–A

HELICAL CORRUGATED STEEL PIPE, PIPE–ARCH
3" x 1" CORRUGATION

EQUIV. DIAMETER (INCHES)	SIZE (INCHES)	SPAN (INCHES)	RISE (INCHES)	MINIMUM THICKNESS REQUIRED (INCH)	MAXIMUM DEPTH OF COVER (FT.) OVER PIPE–ARCH FOR SOIL BEARING CAPACITIES IN 2 TONS/SQ. FT.	MINIMUM COVER (INCHES)
54	60 x 46	58 1/2	48 1/2	0.079	20	15
60	66 x 51	65	54	0.079	20	15
66	73 x 55	72 1/2	58 1/4	0.079	20	18
72	81 x 59	79	62 1/2	0.079	17	18
78	87 x 63	86 1/2	67 1/4	0.079	16	18
84	95 x 67	93 1/2	71 3/4	0.079	16	18
90	103 x 71	101 1/2	76	0.109	16	18
96	112 x 75	108 1/2	80 1/2	0.109	16	21
102	117 x 79	116 1/2	84 3/4	0.109	16	21
108	128 x 83	123 1/2	89 1/4	0.138	16	24
114	137 x 87	131	93 3/4	0.138	16	24
120	142 x 91	138 1/2	98	0.168	16	27

TABLE 9–A

HELICAL CORRUGATED STEEL PIPE, PIPE–ARCH
5" x 1" CORRUGATION

EQUIV. DIAMETER (INCHES)	SIZE (INCHES)	SPAN (INCHES)	RISE (INCHES)	MINIMUM THICKNESS REQUIRED (INCH)	MAXIMUM DEPTH OF COVER (FT.) OVER PIPE–ARCH FOR SOIL BEARING CAPACITIES IN 2 TONS/SQ. FT.	MINIMUM COVER (INCHES)
72	81 x 59	79	62 1/2	0.109	17	18
78	87 x 63	86 1/2	67 1/4	0.109	16	18
84	95 x 67	93 1/2	71 3/4	0.109	16	18
90	103 x 71	101 1/2	76	0.109	16	18
96	112 x 75	108 1/2	80 1/2	0.109	16	21
102	117 x 79	116 1/2	84 3/4	0.109	16	21
108	128 x 83	123 1/2	89 1/4	0.138	16	24
114	137 x 87	131	93 3/4	0.138	16	24
120	142 x 91	138 1/2	98	0.168	16	27

NOTE:
1. BACKFILL AROUND PIPE MUST BE COMPACTED ACCORDING TO DETAIL 206–07–1/1.
2. SOIL BEARING CAPACITY REFERS TO SOIL IN THE REGION OF THE PIPE CORNERS.
3. USE REASONABLE CARE IN HANDLING AND INSTALLATION.

TABLE 10–A

STEEL SPIRAL RIB, PIPE–ARCH
3/4" x 3/4" x 7 1/2" CORRUGATION

SPAN & RISE (INCHES)	MINIMUM SPECIFIED THICKNESS REQUIRED (INCHES)	MAXIMUM COVER (FT.) OVER PIPE ARCH FOR A SOIL CORNER BEARING CAPACITY OF 2 TONS/SQ. FT.	MINIMUM COVER (INCHES)
20 X 16	0.064	16	12
23 X 19	0.064	15	12
27 X 21	0.064	13	12
33 X 26	0.064	13	12
40 X 31	0.064	14	12
46 X 36	0.109	13	12
53 X 41	0.109	13	15
60 X 46	0.109	20	15
66 X 51	0.109	20	18

TABLE 11–A

STEEL SPIRAL RIB, PIPE–ARCH
3/4" x 1" x 11 1/2" CORRUGATION

SPAN & RISE (INCHES)	MINIMUM SPECIFIED THICKNESS REQUIRED (INCHES)	MAXIMUM COVER (FT.) OVER PIPE ARCH FOR A SOIL CORNER BEARING CAPACITY OF 2 TONS/SQ. FT.	MINIMUM COVER (INCHES)
20 X 16	0.064	16	12
23 X 19	0.064	15	12
27 X 21	0.064	13	12
33 X 26	0.064	13	12
40 X 31	0.064	14	12
46 X 36	0.064	13	12
53 X 41	0.064	13	18
60 X 46	0.079	20	18
66 X 51	0.079	20	18
73 X 55	0.109	20	24
81 X 59	0.109	16	24
87 X 63	0.109	16	24
95 X 67	0.109	*16	24

NOTES:
1. FOR TABLES 11–R, COVER LIMITS INDICATED WITH * ARE FOR TRENCH INSTALLATION ONLY.
2. BACKFILL AND BEDDING MATERIAL SHALL CONFORM TO SECTION 206.
3. SEE "INSTALLATION AND BACKFILL OF SPIRAL RIB PIPE" SECTION OF "HANDBOOK OF STEEL DRAINAGE & HIGHWAY CONSTRUCTION PRODUCTS" BY AISI OF 1994 EDITION FOR MORE DETAILS ON INSTALLATION.

DESIGN DATA:

SPECIFICATIONS: AASHTO LRFD BRIDGE DESIGN SPECIFICATIONS SECTION 12, 2007 EDITION, WITH 2008 INTERIM REVISIONS.

DEAD LOAD: 120 POUNDS PER CUBIC FOOT EARTH.

LIVE LOAD: HL–93

SAFETY FACTORS: APPROXIMATELY, 3.0 FOR LONGITUDINAL SEAM STRENGTH 2.0, FOR PIPE WALL BUCKLING.

BACKFILL: SOIL STIFFNESS COEFFICIENT (k) = 0.22.

GENERAL NOTES:

1. WHERE ABRASIVE OR CORROSIVE CONDITIONS EXIST, A HEAVIER WALL THICKNESS OR A PROTECTIVE COATING MAY BE REQUIRED. SEE SECTION 570 OF SPECIFICATIONS FOR CORROSION RESISTANCE NUMBER.
2. THE CONTRACTOR MAY FURNISH A HEAVIER WALL THICKNESS THAN THE MINIMUM SHOWN IN THE TABLES AT NO ADDITIONAL COST TO THE DEPARTMENT.
3. ALL PIPES SHALL BE PROTECTED BY A COVER OF AT LEAST 4 FEET BEFORE PERMITTING HEAVY CONSTRUCTION EQUIPMENT TO PASS OVER THEM DURING CONSTRUCTION.
4. MINIMUM COVERS SHOWN IN THE TABLES SHALL BE MEASURED FROM THE TOP OF THE PIPE TO THE BOTTOM OF THE FLEXIBLE PAVEMENT OR TO THE TOP OF THE RIGID PAVEMENT. FOR MINIMUM COVERS, A MINIMUM 6" CUSHION OF BACKFILL MATERIAL SHALL BE PROVIDED BETWEEN THE BOTTOM OF THE RIGID PAVEMENT AND THE TOP OF THE PIPE.
5. ALL STEEL CORRUGATED METAL AND AND STRUCTURAL PLATE SHALL CONFORM TO AASHTO SPECIFICATION M–36 AND M–167.
6. FOR PIPE SIZES NOT SHOWN, THE GAUGE WILL BE THAT REQUIRED BY THE MINIMUM AND MAXIMUM COVERS FOR THE NEXT LARGER TABULATED PIPE SIZE.
7. PIPE ARCHES IN TABLE 7–A, 49" x 33" AND LARGER SHALL BE DOUBLE RIVETED OR HELICAL. ALL 3" x 1" PIPE ARCHES SHALL BE DOUBLE RIVETED IN THE VALLEYS. ALL 5" x 1" SHALL BE DOUBLE RIVETED IN BOTH THE VALLEYS AND THE CRESTS.
8. ALL PIPE ARCHES ARE TO BE CAMBERED TO ACCOMMODATE SOIL SETTLEMENT AND CONSOLIDATION. THE AMOUNT OF CAMBER WILL DEPEND ON THE SOIL CHARACTERISTICS, COVER, LENGTH OF CULVERT, SLOPE, AND OTHER FACTORS AND SHALL BE APPROVED BY THE PROJECT MANAGER.
9. CORRUGATED METAL AND STRUCTURAL PLATE PIPE ARCHES WHICH HAVE SLIGHTLY DIFFERENT SPAN AND RISE DIMENSIONS THAN THOSE CALLED FOR ON THE PLANS MAY BE SUBSTITUTED FOR THE SIZES SPECIFIED PROVIDED:
   a) THEY MEET THE MINIMUM AND MAXIMUM FILL HEIGHT REQUIREMENT WITHOUT CHANGING THE INVERT ELEVATIONS.
   b) ARE FORMED FROM THE SAME SIZE ROUND PIPE AS THE PIPE SPECIFIED ON THE PLANS.
   c) THAT STRUCTURAL PLATE PIPE ARCHES PROVIDE THE SAME OR LARGER OPENING AREA AS THE PIPE ARCH SPECIFIED ON THE PLANS.
10. SEE 206–07–1/1 – CORRUGATED METAL CULVERT AND PIPE ARCHES BEDDING AND BACKFILL DETAILS FOR INSTALLATION.
11. SEE SECTION 570 PIPE CULVERT SPECIFICATIONS AND SECTION 571 STRUCTURAL PLATE STRUCTURES SPECIFICATIONS.
12. THE CONTRACTOR MAY USE EITHER 2 2/3" X 1/2" CORRUGATION OR 5" X 1" AND 3' X 1" CORRUGATION IF ADEQUATE COVER IS MET.

GAUGE	THICKNESS (INCHES)
1	0.280
3	0.249
5	0.218
7	0.188
8	0.168
10	0.138
12	0.109
14	0.079
16	0.064
18	0.052

NOTE: GAUGES SHOWN ARE "US STANDARD GAUGE" FOR UNCOATED STEEL SHEETS AND PLATES. THICKNESS SHOWN IN INCHES INCLUDE GALVANIZED COATING.

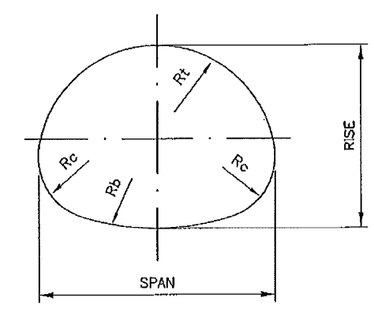

A = ARCH PIPE

TIMOTHY A. MARRS
NEW MEXICO
14072
REGISTERED PROFESSIONAL ENGINEER
4-10-12

	DATE	BY	DESCRIPTION

REVISIONS (OR CHANGE NOTICES)

NEW MEXICO
DEPARTMENT OF TRANSPORTATION
STANDARD DRAWING

MAXIMUM AND MINIMUM COVER
STEEL PIPE ARCHES
HELICAL CORRUGATED METAL
AND
STRUCTURAL PLATES

DESIGNED BY: DRAWN BY: SKL CHECKED BY: TM/YML

206–04–1/3 1 of 3

◐ TABLE 12-A

STRUCTURAL PLATE PIPE, 6" X 2" CORRUGATIONS
BOLTED 18" Rc CORNER RADIUS

DIMENSIONS		MINIMUM REQUIRED THICKNESS (INCHES)	SOIL BEARING CAPACITY, TONS/SQ. FT.			
			2		3	
SPAN FEET-INCHES	RISE FEET-INCHES		H20 MIN. COVER (INCHES)	MAXIMUM COVER (FEET)	MAXIMUM COVER (FEET)	MINIMUM COVER (INCHES) H20 AND H25
6-1	4-7	0.111	12	19		12
6-4	4-9	0.111	12	18		12
6-9	4-11	0.111	12	17		12
7-0	5-1	0.111	12	16		12
7-3	5-3	0.111	12	16		12
7-8	5-5	0.111	12	15		12
7-11	5-7	0.111	12	14		12
8-2	5-9	0.111	18	14		18
8-7	5-11	0.111	18	13		18
8-10	6-1	0.111	18	13		18
9-4	6-3	0.111	18	12		18
9-6	6-5	0.111	18	12		18
9-9	6-7	0.111	18	12		18
10-3	6-9	0.111	18	10		18
10-8	6-11	0.111	18	8		18
10-11	7-1	0.111	18	8		18
11-5	7-3	0.111	18	8	15	18
11-7	7-5	0.111	18	8	15	18
11-10	7-7	0.111	18	7	14	18
12-4	7-9	0.111	24	6	12	24
12-6	7-11	0.111	24	6	12	24
12-8	8-1	0.111	24	6	11	24
12-10	8-4	0.111	24	6	11	24

NOTES:
1. SOIL BEARING CAPACITY REFERS TO SOIL IN THE REGION OF THE PIPE CORNERS. THE REMAINING BACKFILL AROUND THE PIPE-ARCH MUST BE COMPACTED ACCORDING TO DETAIL 206-07-1/1.
2. USE REASONABLE CARE IN HANDLING AND INSTALLATION.

◐ DENOTES THAT THE FURNISHED TABLE IS STILL BASED ON DESIGN SPECIFICATION OF LFD, NOT LRFD YET.

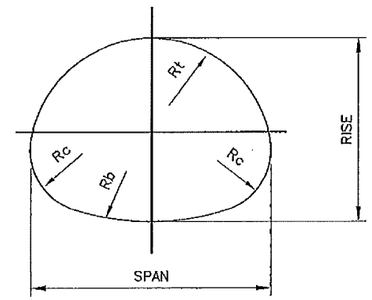

A = ARCH PIPE

GAUGE	THICKNESS (INCHES)
1	0.280
3	0.249
5	0.218
7	0.188
8	0.168
10	0.138

NOTE: GAUGES SHOWN ARE "US STANDARD GAUGE" FOR UNCOATED STEEL SHEETS AND PLATES. THICKNESS SHOWN IN INCHES INCLUDE GALVANIZED COATING.

GENERAL NOTES:

1. WHERE ABRASIVE OR CORROSIVE CONDITIONS EXIST, A HEAVIER WALL THICKNESS OR A PROTECTIVE COATING MAY BE REQUIRED. SEE SECTION 570 FOR CORROSION RESISTANCE NUMBER.
2. THE CONTRACTOR MAY FURNISH A HEAVIER WALL THICKNESS THAN THE MINIMUM SHOWN IN THE TABLES AT NO ADDITIONAL COST TO THE DEPARTMENT.
3. ALL PIPES SHALL BE PROTECTED BY A COVER OF AT LEAST 4 FEET BEFORE PERMITTING HEAVY CONSTRUCTION EQUIPMENT TO PASS OVER THEM DURING CONSTRUCTION.
4. MINIMUM COVERS SHOWN IN THE TABLES SHALL BE MEASURED FROM THE TOP OF THE PIPE TO THE BOTTOM OF THE FLEXIBLE PAVEMENT OR TO THE TOP OF THE RIGID PAVEMENT. FOR MINIMUM COVERS, A MINIMUM 6" CUSHION OF BACKFILL MATERIAL SHALL BE PROVIDED BETWEEN THE BOTTOM OF THE RIGID PAVEMENT AND THE TOP OF THE PIPE.
5. ALL STEEL CORRUGATED METAL AND STRUCTURAL PLATE SHALL CONFORM TO AASHTO SPECIFICATION M-36 AND M-167.
6. FOR PIPE SIZES NOT SHOWN, THE GAUGE WILL BE THAT REQUIRED BY THE MINIMUM AND MAXIMUM COVERS FOR THE NEXT LARGER TABULATED PIPE SIZE.
7. ALL PIPE ARCHES ARE TO BE CAMBERED TO ACCOMMODATE SOIL SETTLEMENT AND CONSOLIDATION. THE AMOUNT OF CAMBER WILL DEPEND ON THE SOIL CHARACTERISTICS, COVER, LENGTH OF CULVERT, SLOPE, AND OTHER FACTORS AND SHALL BE APPROVED BY THE PROJECT MANAGER.
8. CORRUGATED METAL AND STRUCTURAL PLATE PIPE ARCHES WHICH HAVE SLIGHTLY DIFFERENT SPAN AND RISE DIMENSIONS THAN THOSE CALLED FOR ON THE PLANS MAY BE SUBSTITUTED FOR THE SIZES SPECIFIED PROVIDED:
   a) THEY MEET THE MINIMUN AND MAXIMUM FILL HEIGHT REQUIREMENTS WITHOUT CHANGING THE INVERT ELEVATIONS,
   b) ARE FORMED FROM THE SAME SIZE ROUND PIPE AS THE PIPE SPECIFIED ON ON THE PLANS.
   c) THAT STRUCTURAL PLATE PIPE ARCHES PROVIDE THE SAME OR LARGER OPENING AREA AS THE PIPE ARCH SPECIFIED ON THE PLANS.
9. FOR INSTALLATION, SEE 206-07-1/1 - CORRUGATED METAL CULVET AND PIPE ARCHES BEDDING AND BACKFILL DETAILS FOR INSTALLATION.
10. ALL TABLES ARE DERIVED FROM "THE HANDBOOK OF STEEL DRAINAGE & HIGHWAY CONSTRUCTION PRODUCTS" BY THE AMERICAN IRON AND STEEL INSTITUTE, 1994 EDITION, AND ARE SUBJECT TO MANUFACTURING TOLERANCES.
11. SEE SECTION 570 PIPE CULVERTS SPECIFICATIONS AND SECTION 571 STRUCTURAL PLATE STRUCTURES SPECIFICATIONS.

DESIGN DATA:

SPECIFICATIONS: AASHTO STANDARD SPECIFICATIONS FOR HIGHWAY AND BRIDGES, CURRENT EDITION.

DEAD LOAD: 120 POUNDS PER CUBIC FOOT

LIVE LOAD: H-20 AND H-25.

SAFETY FACTORS: 3.0 FOR LONGITUDINAL SEAM STRENGTH 2.0 FOR PIPE WALL BUCKLING. SEE AASHTO SPECIFICATION FOR FLEXIBILITY FACTORS AND SEAM STRENGTH.

BACKFILL: SOIL STIFFNESS COEFFICIENT (k) = 0.22

TIMOTHY A. MARRS
NEW MEXICO
14072
REGISTERED PROFESSIONAL ENGINEER
11-18-12

	DATE	BY	DESCRIPTION

REVISIONS (OR CHANGE NOTICES)

NEW MEXICO
DEPARTMENT OF TRANSPORTATION
STANDARD DRAWING

MAXIMUM AND MINIMUM COVER
STEEL-ROUND PIPES
CORRUGATED METAL
AND
STRUCTURAL PLATES

DESIGNED BY: DRAWN BY: SKL CHECKED BY: YML/TM

206-04-2/3 2 of 3

◐ TABLE 13–A

STRUCTURAL PLATE PIPE, 6" X 2" CORRUGATIONS
BOLTED 18" Rc CORNER RADIUS

DIMENSIONS		MINIMUM REQUIRED THICKNESS (INCHES)	SOIL BEARING CAPACITY, TONS/SQ. FT.			
			2		3	
SPAN FEET–INCHES	RISE FEET–INCHES		H20 MIN. COVER (INCHES)	MAXIMUM COVER (FEET)	MAXIMUM COVER (FEET)	MINIMUM COVER (INCHES) H20 AND H25
6–1	4–7	0.111	12	19		12
6–4	4–9	0.111	12	18		12
6–9	4–11	0.111	12	17		12
7–0	5–1	0.111	12	16		12
7–3	5–3	0.111	12	16		12
7–8	5–5	0.111	12	15		12
7–11	5–7	0.111	12	14		12
8–2	5–9	0.111	18	14		18
8–7	5–11	0.111	18	13		18
8–10	6–1	0.111	18	13		18
9–4	6–3	0.111	18	12		18
9–6	6–5	0.111	18	12		18
9–9	6–7	0.111	18	12		18
10–3	6–9	0.111	18	10		18
10–8	6–11	0.111	18	8		18
10–11	7–1	0.111	18	8		18
11–5	7–3	0.111	18	8	15	18
11–7	7–5	0.111	18	8	15	18
11–10	7–7	0.111	18	7	14	18
12–4	7–9	0.111	24	6	12	24
12–6	7–11	0.111	24	6	12	24
12–8	8–1	0.111	24	6	11	24
12–10	8–4	0.111	24	6	11	24

NOTES:
1. SOIL BEARING CAPACITY REFERS TO SOIL IN THE REGION OF THE PIPE CORNERS. THE REMAINING BACKFILL AROUND THE PIPE–ARCH MUST BE COMPACTED ACCORDING TO DETAIL 206–07–1/1.
2. USE REASONABLE CARE IN HANDLING AND INSTALLATION.

◐ DENOTES THAT THE FURNISHED TABLE IS STILL BASED ON DESIGN SPECIFICATION OF LFD, NOT LRFD YET.

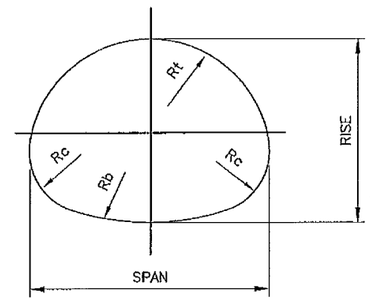

A = ARCH PIPE

GAUGE	THICKNESS (INCHES)
1	0.280
3	0.249
5	0.218
7	0.188
8	0.168
10	0.138

NOTE: GAUGES SHOWN ARE "US STANDARD GAUGE" FOR UNCOATED STEEL SHEETS AND PLATES. THICKNESS SHOWN IN INCHES INCLUDE GALVANIZED COATING.

GENERAL NOTES:

1. WHERE ABRASIVE OR CORROSIVE CONDITIONS EXIST, A HEAVIER WALL THICKNESS OR A PROTECTIVE COATING MAY BE REQUIRED. SEE SECTION 570 FOR CORROSION RESISTANCE NUMBER.
2. THE CONTRACTOR MAY FURNISH A HEAVIER WALL THICKNESS THAN THE MINIMUM SHOWN IN THE TABLES AT NO ADDITIONAL COST TO THE DEPARTMENT.
3. ALL PIPES SHALL BE PROTECTED BY A COVER OF AT LEAST 4 FEET BEFORE PERMITTING HEAVY CONSTRUCTION EQUIPMENT TO PASS OVER THEM DURING CONSTRUCTION.
4. MINIMUM COVERS SHOWN IN THE TABLES SHALL BE MEASURED FROM THE TOP OF THE PIPE TO THE BOTTOM OF THE FLEXIBLE PAVEMENT OR TO THE TOP OF THE RIGID PAVEMENT. FOR MINIMUM COVERS, A MINIMUM 6" CUSHION OF BACKFILL MATERIAL SHALL BE PROVIDED BETWEEN THE BOTTOM OF THE RIGID PAVEMENT AND THE TOP OF THE PIPE.
5. ALL STEEL CORRUGATED METAL AND STRUCTURAL PLATE SHALL CONFORM TO AASHTO SPECIFICATION M–36 AND M–167.
6. FOR PIPE SIZES NOT SHOWN, THE GAUGE WILL BE THAT REQUIRED BY THE MINIMUM AND MAXIMUM COVERS FOR THE NEXT LARGER TABULATED PIPE SIZE.
7. ALL PIPE ARCHES ARE TO BE CAMBERED TO ACCOMMODATE SOIL SETTLEMENT AND CONSOLIDATION. THE AMOUNT OF CAMBER WILL DEPEND ON THE SOIL CHARACTERISTICS, COVER, LENGTH OF CULVERT, SLOPE, AND OTHER FACTORS AND SHALL BE APPROVED BY THE PROJECT MANAGER.
8. CORRUGATED METAL AND STRUCTURAL PLATE PIPE ARCHES WHICH HAVE SLIGHTLY DIFFERENT SPAN AND RISE DIMENSIONS THAN THOSE CALLED FOR ON THE PLANS MAY BE SUBSTITUTED FOR THE SIZES SPECIFIED PROVIDED:
   a) THEY MEET THE MINIMUN AND MAXIMUM FILL HEIGHT REQUIREMENTS WITHOUT CHANGING THE INVERT ELEVATIONS,
   b) ARE FORMED FROM THE SAME SIZE ROUND PIPE AS THE PIPE SPECIFIED ON ON THE PLANS.
   c) THAT STRUCTURAL PLATE PIPE ARCHES PROVIDE THE SAME OR LARGER OPENING AREA AS THE PIPE ARCH SPECIFIED ON THE PLANS.
9. FOR INSTALLATION, SEE 206–07–1/1 – CORRUGATED METAL CULVET AND PIPE ARCHES BEDDING AND BACKFILL DETAILS FOR INSTALLATION.
10. ALL TABLES ARE DERIVED FROM "THE HANDBOOK OF STEEL DRAINAGE & HIGHWAY CONSTRUCTION PRODUCTS" BY THE AMERICAN IRON AND STEEL INSTITUTE, 1994 EDITION, AND ARE SUBJECT TO MANUFACTURING TOLERANCES.
11. SEE SECTION 570 PIPE CULVERTS SPECIFICATIONS AND SECTION 571 STRUCTURAL PLATE STRUCTURES SPECIFICATIONS.

DESIGN DATA:

SPECIFICATIONS: AASHTO STANDARD SPECIFICATIONS FOR HIGHWAY AND BRIDGES, CURRENT EDITION.

DEAD LOAD: 120 POUNDS PER CUBIC FOOT

LIVE LOAD: H–20 AND H–25.

SAFETY FACTORS: 3.0 FOR LONGITUDINAL SEAM STRENGTH 2.0 FOR PIPE WALL BUCKLING. SEE AASHTO SPECIFICATION FOR FLEXIBILITY FACTORS AND SEAM STRENGTH.

BACKFILL: SOIL STIFFNESS COEFFICIENT (k) = 0.22

TIMOTHY A. MARTS
NEW MEXICO
14072
REGISTERED PROFESSIONAL ENGINEER
4-10-12

	DATE	BY	DESCRIPTION

REVISIONS (OR CHANGE NOTICES)

NEW MEXICO
DEPARTMENT OF TRANSPORTATION
STANDARD DRAWING

MAXIMUM AND MINIMUM COVER
STEEL–ROUND PIPES
CORRUGATED METAL
AND
STRUCTURAL PLATES

DESIGNED BY: DRAWN BY: SKL CHECKED BY: YML/TM

206–04–3/3 3 of 3

TABLE 14–R

HELICAL CORRUGATED ALUMINUM PIPE
2 2/3" x 1/2" CORRUGATION

PIPE DIAM. (INCHES)	MINIMUM COVER – INCHES					MAXIMUM COVER – FEET				
	*16Ga .060"	*14Ga .075"	*12Ga .105"	*10Ga .135"	* 8Ga .164"	*16Ga .060"	*14Ga .075"	*12Ga .105"	*10Ga .135"	* 8Ga .164"
12	12	12				125	157			
15	12	12				100	125			
18	12	12				83	104			
21	12	12				71	89			
24	12	12	12			62	78	109		
30	12	12	12				62	87		
36		12	12	12			51	73	94	
42			12	12				62	80	
48	—	—	12	12	12	—	—	54	70	85
54	—	—	15	15	15	—	—	48	62	76
60	—	—	15	15	15	—	—	—	52	64
66	—	—	—	—	18	—	—	—	—	52
72	—	—	—	—	18	—	—	—	—	43

TABLE 15–R

HELICAL CORRUGATED ALUMINUM PIPE
3" x 1" CORRUGATION

PIPE DIAM. (INCHES)	MINIMUM COVER – INCHES					MAXIMUM COVER – FEET				
	*16Ga .060"	*14Ga .075"	*12Ga .105"	*10Ga .135"	* 8Ga .164"	*16Ga .060"	*14Ga .075"	*12Ga .105"	*10Ga .135"	* 8Ga .164"
30	12	12	12	12	12	57	72	101	135	159
36	12	12	12	12	12	47	60	84	112	132
42	12	12	12	12	12	40	51	72	96	113
48	12	12	12	12	12	35	44	62	84	99
54	15	15	15	15	15	31	39	55	74	88
60	15	15	15	15	15	28	35	50	67	79
66	18	18	18	18	18	25	32	45	61	72
72	18	18	18	18	18	23	29	41	56	66
78	—	21	21	21	21	—	27	38	51	61
84	—	—	21	21	21	—	—	35	48	56
90	—	—	24	24	24	—	—	33	44	52
96	—	—	24	24	24	—	—	31	41	49
102	—	—	—	24	24	—	—	—	39	46
108	—	—	—	24	24	—	—	—	37	43
114	—	—	—		24	—	—	—	—	39
120	—	—	—		24	—	—	—	—	36

TABLE 16–R

ALUMINUM SPIRAL RIB PIPE – 3/4" X 3/4" X 7 1/2"

DIAMETER OF PIPE (INCHES)	MAX. DEPTH OF COVER ABOVE TOP OF PIPE (FEET) 3/4" X 3/4" X 7 1/2" CORRUGATION				MIN. CVR (INCHES)
	*16Ga	*14Ga	*12Ga	*10Ga	
24	33	45	73		12
30	26	36	58		15
36	** 21	30	49	69	18
42		** 25	41	59	21
48			36	51	24
54			32	46	24
60			** 29	41	24
66				37	24
72				** 34	27

NOTES: COVER LIMITS INDICATED WITH ** ARE FOR TRENCH INSTALLATION ONLY. FOR EMBANKMENT CONDITIONS, USE NEXT HEAVIER GAGE.

* INDICATES WALL THICKNESS

◐ TABLE 17–R

9" x 2 1/2" CORRUGATIONS, STRUCTURAL PLATE – BOLTED

PIPE DIAM. (INCHES)	MINIMUM COVER – INCHES PLATE THICKNESS		MAXIMUM COVER – FEET PLATE THICKNESS					
	.125"	.150" to .250"	.125"	.150"	.175"	.200"	.225"	.250"
60	12	12	45	60	70	81	92	103
66	12	12	41	54	64	74	84	94
72	12	12	38	50	59	68	77	86
78	12	12	35	46	54	62	71	79
84	12	12	32	42	50	58	66	73
90	12	12	30	40	47	54	61	69
96	12	12	28	37	44	51	57	64
102	13	13	26	35	41	48	54	60
108	14	14	25	33	39	45	51	57
114	15	15	24	31	37	42	48	54
120	15	15	22	30	35	40	46	51
132	17	17	20	27	32	37	42	47
144	18	18	19	25	29	34	38	43
156	20	20	17	23	27	31	35	39
168	—	21	—	21	25	29	33	36
180	—	23	—	—	23	27	30	34
192	—	24	—	—	—	25	28	32
204	—	26	—	—	—	24	27	30
216	—	27	—	—	—	—	25	28
225	—	29	—	—	—	—	—	27
240	—	—	—	—	—	—	—	—
252	—	—	—	—	—	—	—	—

◐ DENOTES THAT THE FURNISHED TABLE IS STILL BASED ON DESIGN SPECIFICATION OF LFD, NOT LRFD YET.

R = ROUND PIPE

GENERAL NOTES:

1. WHERE ABRASIVE OR CORROSIVE CONDITIONS EXIST, A HEAVIER GAUGE METAL OR A PROTECTIVE COATING MAY BE REQUIRED.
2. THE CONTRACTOR MAY FURNISH A HEAVIER GAUGE METAL THAN THE MINIMUM SHOWN IN THE TABLES AT NO ADDITIONAL COST TO THE DEPARTMENT.
3. ALL PIPES SHALL BE PROTECTED BY A COVER OF AT LEAST 4 FEET BEFORE PERMITTING HEAVY CONSTRUCTION EQUIPMENT TO PASS OVER THEM DURING CONSTRUCTION.
4. MINIMUM COVERS SHOWN IN THE TABLES SHALL BE MEASURED FROM THE TOP OF THE PIPE TO THE BOTTOM OF THE FLEXIBLE PAVEMENT OR TO THE TOP OF THE RIGID PAVEMENT. FOR MINIMUM COVERS, A MINIMUM 6" CUSHION OF BACKFILL MATERIAL SHALL BE PROVIDED BETWEEN THE BOTTOM OF THE RIGID PAVEMENT AND THE TOP OF THE PIPE.
5. ALL ALUMINUM CORRUGATED METAL AND STRUCTURAL PLATE SHALL CONFORM TO AASHTO SPECIFICATION M–196 AND M–219.
6. FOR PIPE SIZES NOT SHOWN, THE GAUGE WILL BE THAT REQUIRED BY THE MINIMUM AND MAXIMUM COVERS FOR THE NEXT LARGER TABULATED PIPE SIZE.
7. FILL COVERS OVER 40' SHALL BE USED ONLY AFTER A THOROUGH INVESTIGATION OF THE FOUNDATION MATERIALS.
8. ANY PIPE OF A SIZE AND GAUGE WHICH FALL BELOW THE HEAVY LINE IN THE TABLES MUST BE REVIEWED BY THE BRIDGE ENGINEER FOR POSSIBLE APPROVAL.
9. FOR ALUMINUM PIPES, GALVANIZED STEEL BOLTS SHALL BE USED ON ALL STRUCTURAL PLATE. THE USE OF ALUMINUM BOLTS WILL REQUIRE THE APPROVAL OF THE BRIDGE ENGINEER.
10. PIPES IN TABLE 10–R, SMALLER THAN 42" DIAMETER, MAY BE HELICAL, OR DOUBLE RIVETED. PIPE IN TABLE 10–R, 42" IN DIAMETER OR GREATER, MUST BE HELICAL.
11. ALL PIPES ARE TO BE CAMBERED TO ACCOMMODATE SOIL SETTLEMENT AND CONSOLIDATION. THE AMOUNT OF CAMBER WILL DEPEND ON SOIL CHARACTERISTICS, COVER, LENGTH OF CULVERT, SLOPE, AND OTHER FACTORS AND SHALL BE APPROVED BY THE PROJECT MANAGER.
12. SEE SERIAL 206–07–1/1 FOR INSTALLATION DETAILS.
13. GAUGES SHOWN ARE U.S. STANDARD GAUGES.

DESIGN DATA:

SPECIFICATIONS:	AASHTO LRFD BRIDGE DESIGN SPECIFICATIONS, SECTION 12, 2007 EDITION, WITH 2008 INTERIM REVISIONS.
DEAD LOAD:	120 POUNDS PER CUBIC FOOT EARTH.
LIVE LOAD:	HL–93
SAFETY FACTORS:	APPROXIMATELY, 3.0 FOR LONGITUDINAL SEAM STRENGTH, 2.0 FOR PIPE WALL BUCKLING.
BACKFILL:	SOIL STIFFNESS COEFFICIENT (k) = 0.22

TIMOTHY A. HARRS
NEW MEXICO
14072
REGISTERED PROFESSIONAL ENGINEER
4-10-12

	DATE	BY	DESCRIPTION

REVISIONS (OR CHANGE NOTICES)

NEW MEXICO
DEPARTMENT OF TRANSPORTATION
STANDARD DRAWING

MAXIMUM AND MINIMUM COVER
ALUMINUM ROUND
HELICAL CORRUGATED METAL
AND
STRUCTURAL PLATES

DESIGNED BY: DRAWN BY: SKL CHECKED BY: YML/TM

206–05–1/1 1 of 1

TABLE 18–A

HELICAL CORRUGATED ALUMINUM PIPE – 3" x 1" CORRUGATION

NOMINAL SPAN x RISE INCHES	DIA. OF EQUIV. RD. PIPE (INCHES)	SPAN (INCHES)	"Rc" (INCHES)	"Rt" (INCHES)	MINIMUM THICKNESS		2 TONS/SQ. FT. CORNER FOOTING PRESSURE	
					INCHES	GAGE	MIN. COVER (INCHES)	MAX. COVER (FEET)
60" x 46"	54	58 1/2	18 3/4	29 3/8	0.075	14	15	20
66" x 51"	60	65	20 3/4	32 5/8	0.075	14	18	20
73" X 55"	66	72 1/2	22 7/8	36 3/4	0.075	14	21	20
81" x 59"	72	79	20 7/8	39 1/2	0.105	12	21	16
87" x 63"	78	86 1/2	22 5/8	43 3/8	0.105	12	24	16
95" x 67"	84	93 1/2	24 3/8	47	0.105	12	24	16
103" x 71"	90	101 1/2	26 1/8	51 1/4	0.135	10	24	16
112" x 75"	96	108 1/2	27 3/4	54 7/8	0.164	8	24	16

TABLE 19–A

ALUMINUM SPIRAL RIB PIPE–ARCH
3/4" x 3/4" x 7 1/2" CORRUGATION

SPAN x RISE (INCHES)	MINIMUM THICKNESS REQUIRED		MAXIMUM DEPTH OF COVER (FT.) OVER PIPE–ARCH FOR SOIL BEARING CAPACITIES IN 2 TONS/SQ. FT.	MINIMUM COVER (INCHES)
	INCHES	GAGE		
20 x 16	0.060	16	16	12
23 x 19	0.060	16	15	12
27 x 21	0.060	16	13	15
33 x 26	0.060	16	13	18
40 x 31	0.075	14	13	21
46 x 36	0.105	12	13	24
53 x 41	0.105	12	13	24
60 x 46	0.105	12	* 20	24
66 x 51	0.135	10	20	24

NOTES:
1. COVER LIMITS INDICATION WITH * ARE FOR TRENCH INSTALLATION ONLY. FOR EMBANKMENT CONDITIONS, USE NEXT HEAVIER GAGE.
2. GAGE MAY BE HEAVIER THAN SPECIFIED DUE TO A MANUFACTURIING REQUIREMENTS.

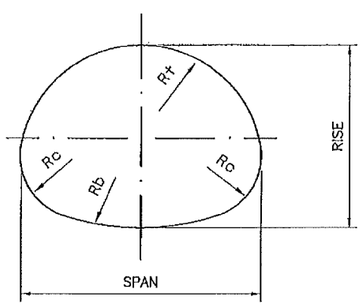

A = ARCH PIPE

◐ TABLE 20–A

9" x 2½" CORRUGATIONS, ALUMINMUM PLATE – BOLTED

SPAN X RISE IN FEET AND INCHES	"Rc" CORNER RADIUS (INCHES)	"Rt" (INCHES)	3 TONS/SQ. FT. CORNER FOOTING PRESSURE						
			MINIMUM COVER–INCHES		MAXIMUM COVER–FEET				
			PLATE THICKNESS		PLATE THICKNESS				
			.125"	.150" to .250"	.125"	.150"	.175"	.200"	.225"
6'–11" x 5'–9"	31.8	43.7	12	12	32	36			
7'–9" x 6'–0"	31.8	51.6	12	12	29	30			
8'–5" x 6'–3"	31.8	54.9	13	13	27	29			
9'–3" x 6'–5"	31.8	64.4	14	14	24	24			
9'–11" x 6'–8"	31.8	66.4	15	15	23	23			
10'–9" x 6'–10"	31.8	77.5	17	17	20	23			
11'–5" x 7'–1"	31.8	78.2	18	18	19	20			
12'–3" x 7'–3"	31.8	90.8	19	19	17	20			
12'–11" x 7'–6"	31.8	90.4	20	20	16	17			
13'–11" x 9'–5"	31.8	86.2	21	21	15	17			
14'–11" x 9'–10"	31.8	91.8	23	23	14	18			
15'–7" x 10'–2"	31.8	96.4	24	24	14	17			
16'–4" x 10'–6"	31.8	101.0	—	25	—	16			
17'–0" x 10'–10"	31.8	105.7	—	26	—	15			
17'–9" x 11'–2"	31.8	110.4	—	27	—	15	14		
18'–5" x 11'–6"	31.8	115.2	—	28	—	—	13		
19'–2" x 11'–9"	31.8	119.9	—	29	—	—	—	13	13
19'–10" x 12'–1"	31.8	124.7	—	30	—	—	—	12	12
20'–10" x 12'–7"	31.8	130.0	—	32	—	—	—	—	12
21'–6" x 12'–11"	31.8	134.8	—	33	—	—	—	—	11

◐ DENOTES THAT THE FURNISHED TABLE IS STILL BASED ON DESIGN SPECIFICATION OF LFD, NOT LRFD YET.

GENERAL NOTES:

1. WHERE ABRASIVE OR CORROSIVE CONDITIONS EXIST, A HEAVIER WALL THICKNESS OR A PROTECTIVE COATING MAY BE REQUIRED.
2. THE CONTRACTOR MAY FURNISH A HEAVIER WALL THICKNESS THAN THE MINIMUM SHOWN IN THE TABLES AT NO ADDITIONAL COST TO THE STATE.
3. ALL PIPES SHALL BE PROTECTED BY A COVER OF AT LEAST 4 FEET BEFORE PERMITTING HEAVY CONSTRUCTION EQUIPMENT TO PASS OVER THEM DURING CONSTRUCTION.
4. MINIMUM COVERS SHOWN IN THE TABLES SHALL BE MEASURED FROM THE TOP OF THE PIPE TO THE BOTTOM OF THE FLEXIBLE PAVEMENT OR TO THE TOP OF THE RIGID PAVEMENT. FOR MINIMUM COVERS A MINIMUM 6" CUSHION OF BACKFILL MATERIAL SHALL BE PROVIDED BETWEEN THE BOTTOM OF THE RIGID PAVEMENT AND THE TOP OF THE PIPE.
5. ALL ALUMINUM CORRUGATED METAL AND STRUCTURAL PLATE SHALL CONFORM TO AASHTO SPECIFICATION M–196 AND M–219.
6. FOR PIPE SIZES NOT SHOWN, THE GAUGE WILL BE THAT REQUIRED BY THE MINIMUM AND MAXIMUM COVERS FOR THE NEXT LARGER TABULATED PIPE SIZE.
7. "RC", "RT", SPAN, AND RISE ARE SUBJECT TO MANUFACTURING TOLERANCES.
8. ALL PIPE ARCHES ARE TO BE CAMBERED TO ACCOMMODATE SOIL SETTLEMENT AND CONSOLIDATION. THE AMOUNT OF CAMBER WILL DEPEND ON THE SOIL CHARACTERISTICS, COVER, LENGTH OF CULVERT, SLOPE, AND OTHER FACTORS AND SHALL BE APPROVED BY THE PROJECT MANAGER.
9. FOR ALUMINUM PIPES, GALVANIZED STEEL BOLTS SHALL BE USED ON ALL STRUCTURAL PLATES. THE USE OF ALUMINUM BOLTS WILL REQUIRE THE APPROVAL OF THE BRIDGE ENGINEER.
10. CORRUGATED METAL AND STRUCTURAL PLATE PIPE ARCHES WHICH HAVE SLIGHTLY DIFFERENT SPAN AND RISE DIMENSIONS THAN THOSE CALLED FOR ON THE PLANS MAY BE SUBSTITUTED FOR THE SIZES SPECIFIED ON THE PLANS PROVIDED:
    - (a) THEY MEET THE MINIMUM AND MAXIMUM FILL HEIGHT WITHOUT CHANGING THE INVERT ELEVATIONS.
    - (b) THAT CORRUGATED METAL PIPE ARCHES ARE FORMED FROM THE SAME SIZE ROUND PIPE AS THE PIPE ARCH SPECIFIED ON THE PLANS.
    - (c) THAT STRUCTURAL PLATE PIPE ARCHES PROVIDE THE SAME OR LARGER OPENING AREA AS THE PIPE ARCH SPECIFIED ON THE PLANS.
11. SEE SERIAL 206–07–1/1– CORRUGATED METAL CULVERT AND PIPE ARCHED BEDDING AND BACKFILL DETAILS FOR INSTALLATION.

DESIGN DATA:

SPECIFICATIONS: AASHTO LRFD BRIDGE DESIGN SPECIFICATION, SECTION 12, 2007 EDITION, WITH 2008 INTERIM REVISIONS.

DEAD LOAD: 120 POUNDS PER CUBIC FOOT EARTH.

LIVE LOAD: HL–93

SAFETY FACTORS: APPROXIMATELY, 3.0 FOR LONGITUDINAL SEAM STRENGTH, 2.0 FOR PIPE WALL BUCKLING.

BACKFILL: SOIL STIFFNESS COEFFICIENT (k) = 0.22

TIMOTHY A. MARRS
NEW MEXICO
14072
REGISTERED PROFESSIONAL ENGINEER
11-16-12

	DATE	BY	DESCRIPTION

REVISIONS (OR CHANGE NOTICES)

NEW MEXICO
DEPARTMENT OF TRANSPORTATION
STANDARD DRAWING

MAXIMUM AND MINIMUM COVER
ALUMINUM PIPE ARCHES
HELICAL CORRUGATED METAL
AND
STRUCTURAL PLATES

DESIGNED BY: DRAWN BY: SKL CHECKED BY: YML/TM

206–06–1/1 1 of 1

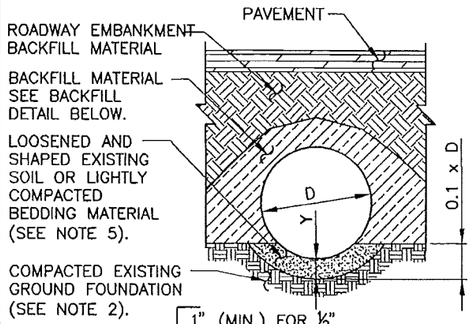

SUITABLE EXISTING GROUND FOUNDATION

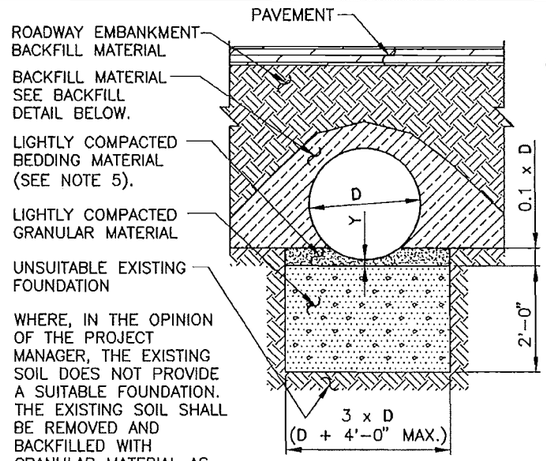

UNSUITABLE EXISTING FOUNDATION

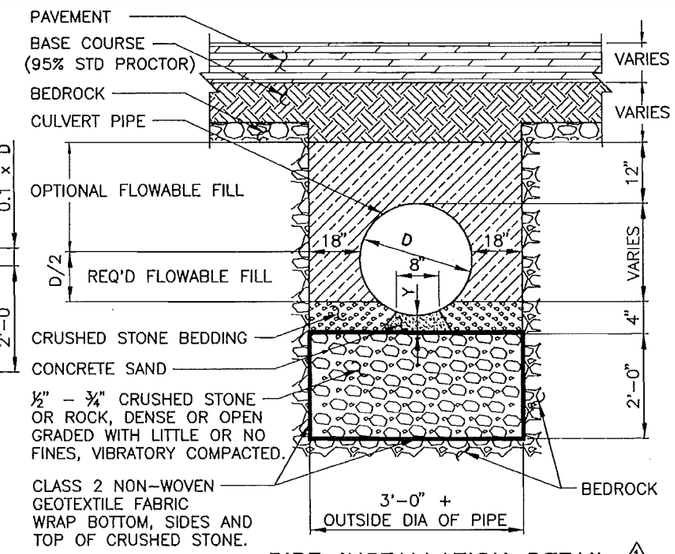

PIPE INSTALLATION DETAIL ⚠1
(FOR BEDROCK EXCAVATION ONLY)

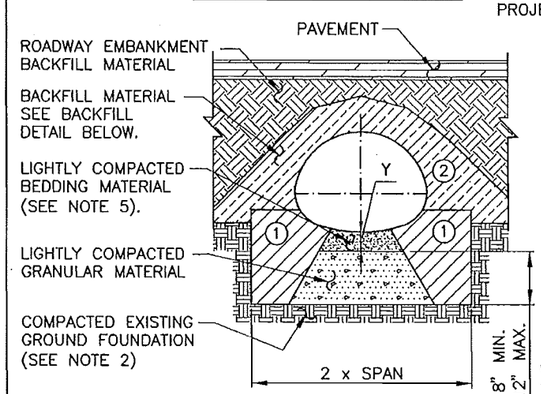

SUITABLE EXISTING GROUND FOUNDATION

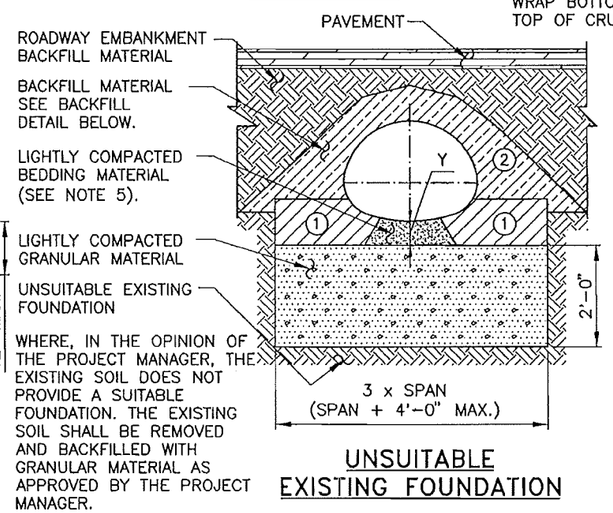

UNSUITABLE EXISTING FOUNDATION

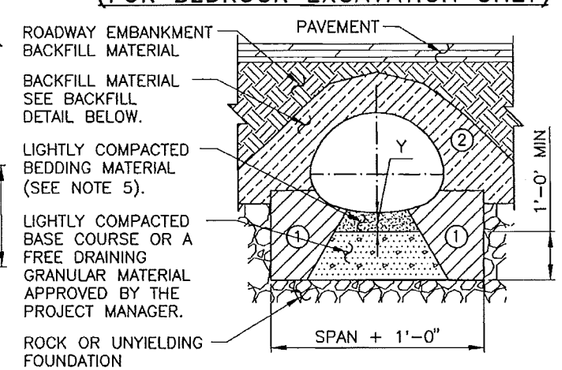

ROCK OR UNYIELDING FOUNDATION

GENERAL NOTES:

1. RIVETED OR WELDED METAL PIPE AND ARCHES SHALL BE PLACED WITH THE INSIDE CIRCUMFERENTIAL LAPS POINTING DOWNSTREAM AND WITH LONGITUDINAL LAPS AT THE SIDE ON QUARTER POINTS, NOT TOP OR BOTTOM. STRUCTURAL PLATE AND PIPE ARCH CULVERTS SHALL BE ERECTED AS SHOWN ON THE ERECTION DIAGRAMS FURNISHED BY THE SUPPLIER.
2. THE EXISTING GROUND FOUNDATION MATERIAL UNDER PIPES SHALL BE BROKEN UP AND COMPACTED TO A MINIMUM DEPTH OF 6". COMPACTION SHALL BE 95% OF MAXIMUM DENSITY BY AASHTO SPECIFICATION T-99.
3. WHERE AN UNSUITABLE MATERIAL (PEAT, MUCK, ETC.) IS ENCOUNTERED AT OR BELOW THE INVERT ELEVATION. THE NECESSARY SUBSURFACE EXPLORATION AND ANALYSIS SHALL BE MADE AND CORRECTIVE TREATMENT SHALL BE AS DIRECTED BY THE PROJECT MANAGER.
4. IMPERVIOUS MATERIAL SHALL BE PLACED LONGITUDINALLY ALONG THE PIPE TO THE ELEVATIONS AND LIMITS SHOWN ON THE "CROSS SECTION OF ROADWAY EMBANKMENT," AND TRANSVERSELY AROUND THE PIPE TO THE DENSITY AND SLOPES SHOWN FOR BACKFILL MATERIAL ON THE "BACKFILL DETAIL." UNLESS OTHERWISE DESIGNATED ON THE PLANS OR DIRECTED BY THE PROJECT MANAGER IMPERVIOUS MATERIAL SHALL CONFORM TO AASHTO SPECIFICATION A-6 OR A-7 SOILS.
5. BEDDING MATERIAL SHALL BE ROUGHLY SHAPED TO FIT BOTTOM OF PIPES AND THEN LIGHTLY COMPACTED. MATERIAL SHALL CONFORM TO SECTION 206 OF THE NEW MEXICO DEPARTMENT OF TRANSPORTATION STANDARD SPECIFICATIONS. FOR PIPE ARCH, THE WIDTH OF THE BEDDING SHALL NOT EXCEED THE WIDTH OF THE BOTTOM ARC.
6. WHERE MULTIPLE LINES OF PIPE OR PIPE ARCHES GREATER THAN 4'-0" IN DIAMETER OR SPAN ARE USED, THEY SHALL BE SPACED SO THAT ADJACENT SIDES OF THE PIPE SHALL BE AT LEAST ONE-HALF DIAMETER OR 3'-0" APART, WHICHEVER IS LESS, TO PERMIT ADEQUATE COMPACTION OF BACKFILL MATERIAL. FOR DIAMETERS 4'-0" AND LESS, THE MINIMUM SPACING SHALL BE NOT LESS THAN 2'-0". SEE 570-02-1/2 OR 570-02-2/2 FOR FLARED END SECTIONS.
7. A CONTINUOUS CONCRETE CRADLE SHALL BE USED ONLY WHEN CALLED FOR ON THE PLANS.
8. BACKFILL MATERIAL SHALL CONFORM TO SECTION 206 OF THE NEW MEXICO DEPARTMENT OF TRANSPORTATION STANDARD SPECIFICATIONS. SPECIAL CARE SHALL BE TAKEN WHEN COMPACTING BACKFILL AT THE HUNCHES AND SIDES OF PIPES.
9. REFER TO 206-03-1/1 THRU 206-06-1/1 FOR TABLE OF MINIMUM AND MAXIMUM COVER AND CORRESPONDING GAUGE.

KEY	SYMBOL	DESCRIPTION
1		100% COMPACTION
2		90% COMPACTION

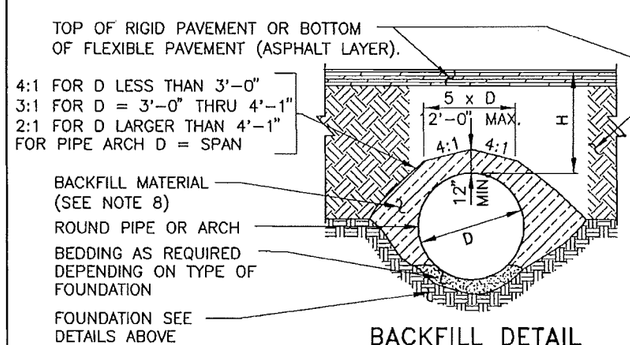

BACKFILL DETAIL

BACKFILL DETAIL SHOWN ABOVE SHALL NOT BE CONSTRUED AS RELIEVING THE CONTRACTOR OF HIS OBLIGATIONS REGARDING DAMAGE TO THE CULVERT PIPE. H = MINIMUM OR MAXIMUM COVER.

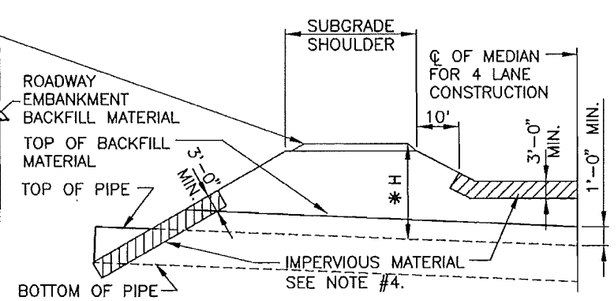

CROSS SECTION OF ROADWAY EMBANKMENT

* LOCATION OF MAXIMUM OR MINIMUM COVER DEPENDS ON PIPE SLOPE AND ROADWAY X-SECTION.

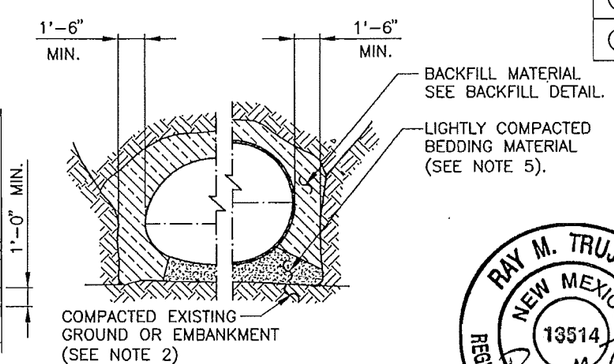

PIPE ARCHES ROUND PIPE

TRENCH CONDITION

RAY M. TRUJILLO
NEW MEXICO
13514
REGISTERED PROFESSIONAL ENGINEER
8/29/08

NO.	DATE	REV.BY	DESCRIPTION
1	2/14/07	YML	REVISIONS TO BEDROCK DETAIL

REVISIONS (OR CHANGE NOTICES)

NEW MEXICO
DEPARTMENT OF TRANSPORTATION
STANDARD DRAWING

CORRUGATED METAL CULVERT
AND PIPE ARCHES
BEDDING AND BACKFILL
DETAILS

DESIGNED BY ____ DRAWN BY SKL CHECKED BY TM/YML

206-07-1/1 1 OF 1

HDPE PLASTIC ROUND PIPE CULVERT

FILL HEIGHT TABLE AND MINIMUM CELL CLASSIFICATION NUMBER PER ASTM D 3350

(SOLID WALL, CORRUGATED AND RIBBED PIPE CULVERT)

SOLID WALL

PIPE SIZE	MNIMUM COVER	CELL CLASSIFICATION NUMBER 335434C						
		MINIMUM WALL THICKNESS IN INCHES						
DIAMETER INCHES	INCHES	0.607	0.857	0.923	1.154	1.385	1.292	1.477
		MAXIMUM FILL HEIGHT IN FEET						
12	12	57						
18	12		52					
24	12			38				
30	12				38			
36	12					38		
42	12						27	
48	12							27

CORRUGATED

PIPE SIZE	MNIMUM COVER	CELL CLASS NO. 324420C
DIAMETER INCHES	INCHES	MAXIMUM FILL HEIGHT IN FEET
12	12	10
15	12	10
18	12	10
24	12	10
30	12	10
36	12	10
42	12	10
48	12	10
54	24	10
60	24	10

RIBBED

PIPE SIZE	MINIMUM COVER	CELL CLASS NO. 334440C	CELL CLASS NO. 335434C
DIAMETER INCHES	INCHES	MAXIMUM FILL HEIGHT IN FEET	
18	12	18	24
24	12	22	28
30	12	22	28
36	12	25	31
42	12	21	27
48	12	21	26

PVC ROUND PIPE CULVERT

FILL HEIGHT TABLE AND MINIMUM CELL CLASSIFICATION NUMBER PER ASTM D 1784

(SOLID WALL, AND RIBBED PIPE CULVERT)

SOLID WALL

PIPE SIZE	MINIMUM COVER	CELL CLASS NO. 12454C		CELL CLASS NO. 12364C	
DIAMETER INCHES	INCHES	MINIMUM WALL THICKNESS IN INCHES			
		0.358	0.438	0.358	0.438
		MAXIMUM FILL HEIGHT IN FEET			
12	12	65		69	
15	12		62		66

RIBBED

PIPE SIZE	MINIMUM COVER	CELL CLASS NO. 12454C	CELL CLASS NO. 12364C
DIAMETER INCHES	INCHES	MAXIMUM FILL HEIGHT IN FEET	
12	12	37	26
15	12	32	22
18	12	33	23
24	12	29	21
30	12	28	20
36	12	27	19
42	12	26	18
48	12	24	17

NOTES:

1. HDPE PIPE SHALL CONFORM TO ALL REQUIREMENTS OF AASHTO SPECIFICATION M 294. PVC PIPE SHALL CONFORM TO AASHTO M 304 & M 278.
2. WHEN DIRECTED, CAMBER PIPE CULVERTS UPWARD FROM A CHORD THROUGH THE INLET AND OUTLET INVERTS AN ORDINATE AMOUNT EQUAL TO 1% OF THE PIPE LENGTH. DEVELOP CAMBER ON A PARABOLIC CURVE. IF THE MIDPOINT ELEVATION ON THE PARABOLIC CURVE AS DESIGNED EXCEEDS THE ELEVATION OF THE INLET INVERT, REDUCE THE AMOUNT OF CAMBER OR INCREASE THE PIPE CULVERT GRADIENT.
3. MINIMUM COVERS SHOWN IN THE TABLES SHALL BE MEASURED FROM THE TOP OF THE PIPE TO THE BOTTOM OF THE FLEXIBLE PAVEMENT OR TO THE TOP OF THE RIGID PAVEMENT. FOR MINIMUM COVERS, A MINIMUM 6" CUSHION OF BACKFILL MATERIAL SHALL BE PROVIDED BETWEEN THE BOTTOM OF THE RIGID PAVEMENT AND THE TOP OF THE PIPE.
4. SEE STANDARD SERIAL 206-07-1/1 FOR BEDDING AND BACKFILL DETAILS. BEDDING AND BACKFILL SHALL MEET REQUIREMENTS OF AASHTO SECTION 30 AND ASTM D 2321.
5. SEE SECTION 206 OF THE NEW MEXICO DEPARTMENT OF TRANSPORTATION'S STANDARD SPECIFICATIONS FOR INFORMATION ON BEDDING MATERIAL. SEE ALSO SECTION 570 FOR CULVERT SPECIFICATIONS.

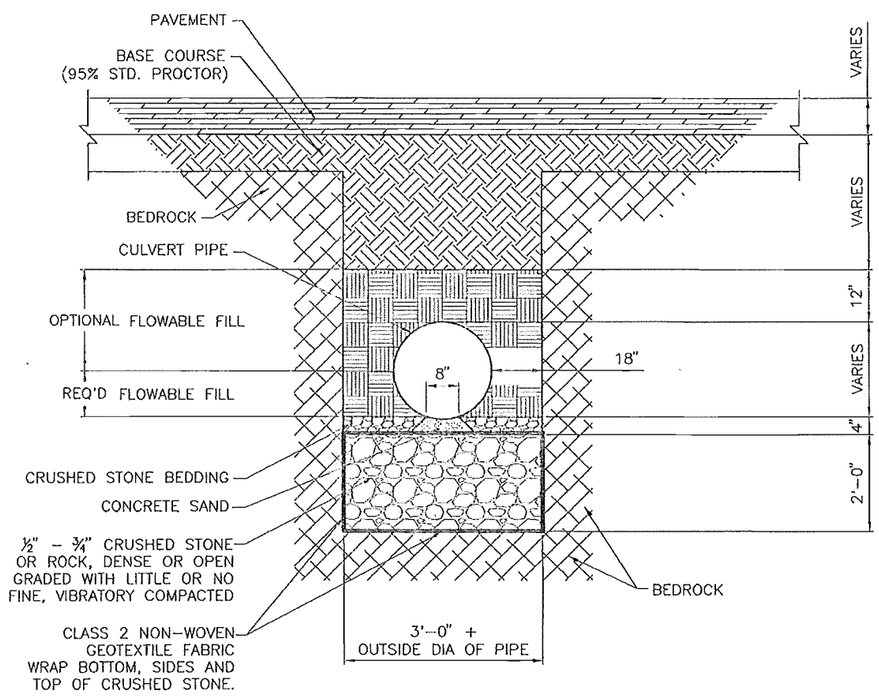

PIPE INSTALLATION DETAIL
(FOR BEDROCK EXCAVATION ONLY)

NOTES:

1. THE MIDDLE 8" OF THE BEDDING SAND SHOULD BE LOOSELY PLACED WITH THE REMINDER COMPACTED TO A MINIMUM OF 95% STANDARD PROCTOR DENSITY.
2. THE PIPE SHOULD BE ANCHORED DOWN PROPERLY TO PREVENT FLOATATION DURING FLOWABLE FILL PLACEMENT.

RAY M. TRUJILLO
NEW MEXICO
13514
REGISTERED PROFESSIONAL ENGINEER
3/16/11

	DATE	BY	DESCRIPTION
1	10/9/10	YML	GENERAL REVISIONS.

REVISIONS (OR CHANGE NOTICES)

NEW MEXICO
DEPARTMENT OF TRANSPORTATION
STANDARD DRAWING

FILL HEIGHTS
FOR
PLASTIC CULVERT PIPE
EXCAVATION DETAIL

DESIGNED BY: DRAWN BY: SKL CHECKED BY: YML/TM

206-10-1/1 1 of 1

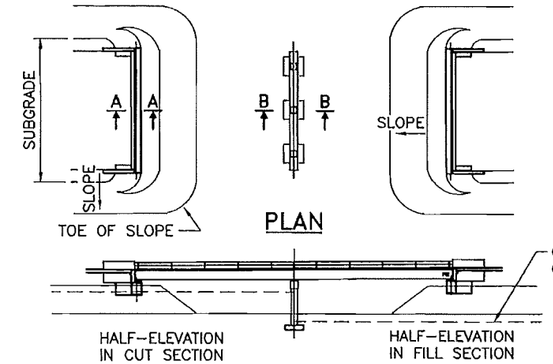

PROFILE

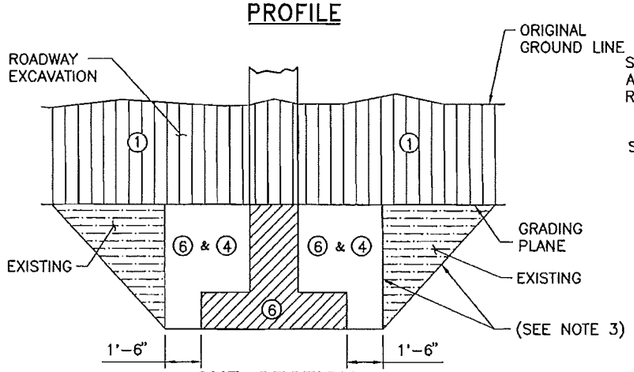

CUT SECTION

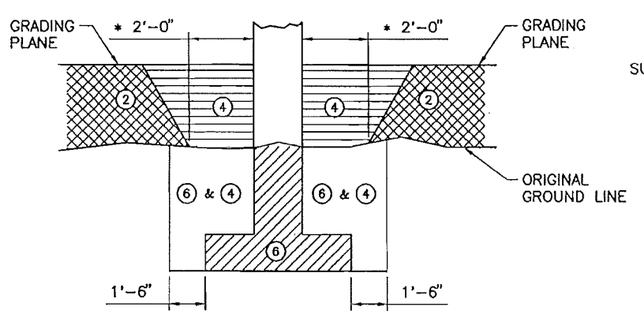

FILL SECTION

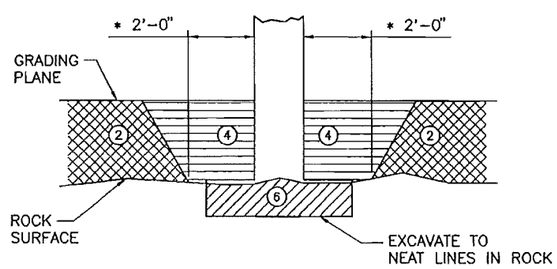

EXCAVATION IN ROCK

SECTION B-B DETAILS

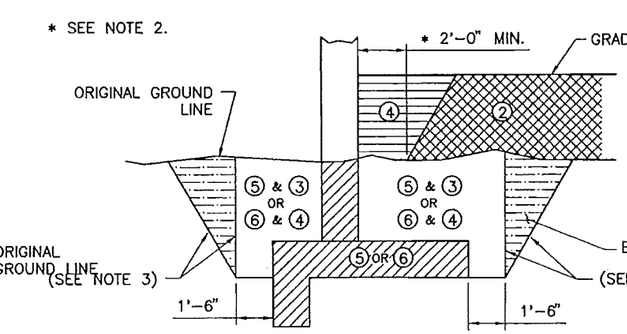

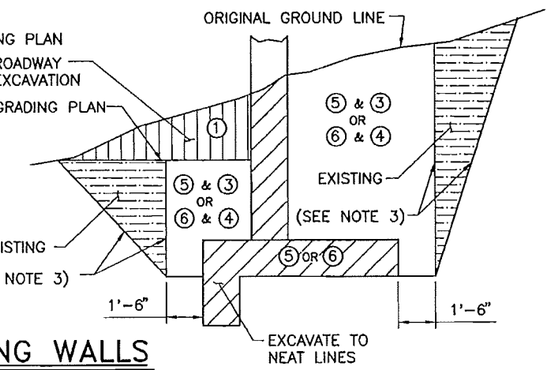

RETAINING WALLS

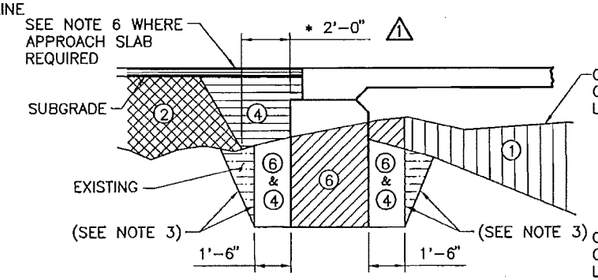

EXCAVATION NORMAL

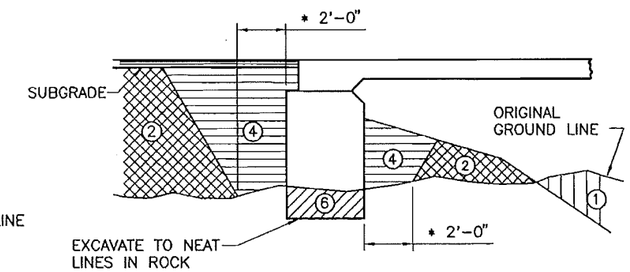

EXCAVATION IN ROCK

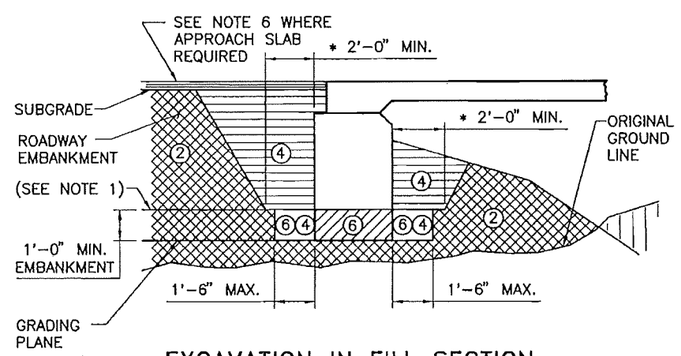

EXCAVATION IN FILL SECTION

SECTION A-A DETAILS

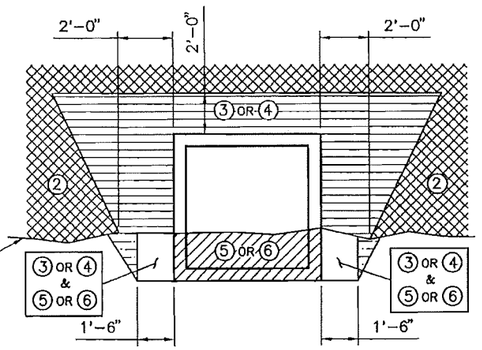

HORIZONTAL LINED AREAS INDICATE BACKFILL FOR THE FULL LENGTH OF THE CBC'S.

METHOD OF PLACING BACKFILL AROUND CBC'S

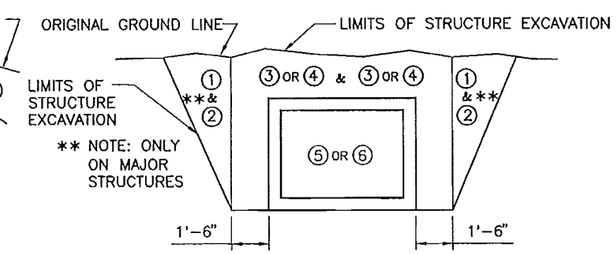

METHOD OF EXCAVATON AROUND CBC'S

KEY #			
1	203	—	ROADWAY EXCAVATION
2	203	—	ROADWAY EMBANKMENT
3 4	206 210	—	STRUCTURE BACKFILL
5 6	206 210	—	STRUCTURE EXCAVATION

NOTE: SECTION 206 – MINOR STRUCTURES
SECTION 210 – MAJOR STRUCTURES

SECTION DESCRIPTION

GENERAL NOTES

1. COMPACT ROADWAY EMBANKMENT 10'-0" (MIN) ABOVE BOTTOM OF ABUTMENT. EXCAVATION TO BOTTOM OF ABUTMENT ELEVATION SHALL BE DELAYED UNTIL THE CONTRACTOR IS READY TO PLACE THE ABUTMENT FORMS AND CONCRETE.
2. ALL DETAILS ARE SHOWN WITH THE ROADWAY EMBANKMENT PLACED FIRST AND THE STRUCTURAL BACKFILL MATERIAL PLACED ON TOP OF IT. THE CONTRACTOR SHALL USE THIS PLACEMENT ORDER SO THE STRUCTURAL BACKFILL CAN BE COMPACTED TO THE MAXIMUM DENSITY REQUIRED. NO EMBANKMENT MATERIAL SHALL BE WITHIN 2'-0" OF THE CONCRETE STRUCTURE.
3. WHERE THE SITE OF WORK OR CHARACTER OF MATERIAL TO BE EXCAVATED REQUIRES A SLOPE LESS THAN VERTICAL AND THE CONTRACTOR OBTAINS APPROVAL FROM THE ENGINEER TO MAKE A CUT LESS THAN VERTICAL, INSTEAD OF USING COFFERDAMS, THE SLOPE OF THE CUT SHALL NOT BE STEEPER THAN THE STABILITY OF THE MATERIAL PERMITS AS DETERMINED BY THE PROJECT MANAGER. THIS ADDITIONAL EXCAVATION AND BACKFILL, BEYOND A VERTICAL CUT, SHALL BE CONSIDERED INCIDENTAL TO THE COMPLETION OF THE WORK AND NO ADDITIONAL PAYMENT WILL BE MADE THEREFORE.
4. GRADING PLANE IS THE SURFACE TO WHICH PRECISE GRADING IS FINISHED SUCH AS SUBGRADE UNDER THE TEMPLATE SECTION OF A ROAD, ROADWAY SIDE SLOPES, DITCHES ADJACENT TO PIERS, DITCH SLOPES AT WINGWALLS, SUBGRADE UNDER ABUTMENTS AND RETAINING WALLS.
5. EARTHWORK FOR CBC'S TO BE IN ACCORDANCE WITH SECTION 206 OR SECTION 210 OF THE NEW MEXICO DEPARTMENT OF TRANSPORTATION SPECIFICATIONS.
6. STRUCTURE BACKFILL AT APPROACH SLABS SHALL CONFORM TO AASHTO A-1-a.

8-27-08

NO.	DATE	REV.BY	DESCRIPTION
1	3/18/08	YML	CORRECTED THE LOCATION OF 2'-0" INDICATED

REVISIONS (OR CHANGE NOTICES)

NEW MEXICO
DEPARTMENT OF TRANSPORTATION
STANDARD DRAWING

EXCAVATION AND BACKFILL
FOR
BRIDGES, WALLS AND CBC'S

DESIGNED BY ____ DRAWN BY SKL CHECKED BY YML/TM

210-01-1/1 1 of 1

GENERAL NOTES

1. WORKMANSHIP AND MATERIALS SHALL CONFORM TO THE NEW MEXICO DEPARTMENT OF TRANSPORTATION'S STANDARD SPECIFICATIONS FOR HIGHWAY AND BRIDGE CONSTRUCTION (CURRENT EDITION), APPLICABLE SUPPLEMENTAL SPECIFICATIONS AND SPECIAL PROVISIONS.
2. BRIDGE BARRIER RAILING SHALL CONFORM TO THE REQUIREMENTS CONTAINED IN SECTION 514 OF THE STANDARD SPECIFICATIONS. CONCRETE FOR BRIDGE BARRIER RAILING SHALL BE SUPERSTRUCTURE CONCRETE CLASS "HPD." BARRIER RAILING SHALL BE PAID FOR AT THE UNIT PRICE PER LINEAR FOOT, INCLUDING COMPLETELY EMBEDDED REINFORCING STEEL, ANCHOR BOLTS AND ANY OTHER COMPLETELY EMBEDDED OR APPURTENANT STEEL ITEMS.
3. REINFORCING BARS SHALL CONFORM TO THE REQUIREMENTS CONTAINED IN SECTION 540 OF THE STANDARD SPECIFICATIONS. REINFORCING BARS SHALL BE GRADE 60 UNLESS A DIFFERENT GRADE IS SPECIFIED ELSEWHERE IN THE PLANS. DIMENSIONS SHOWN REFER TO THE CENTERLINES OF BARS UNLESS NOTED OTHERWISE. USE THE SAME TYPE OF REINFORCEMENT FOR BRIDGE BARRIER RAILING AS USED IN DECK.
4. BARRIER RAILING INSTALLATION ON DECK SLABS MAY BE TYPE 42A AND 42B AT THE OPTION OF THE CONTRACTOR. DECK THICKNESS (NEW OR EXISTING) MUST BE APPROPRIATE FOR THE TYPE OF INSTALLATION SELECTED.
5. FOR DETAILS OF BRIDGE BARRIER RAILING CONNECTION TO THE APPROACH METAL BARRIER – SEE SHEET 4 OF 6.
6. COVER TO REINFORCING BARS SHALL BE 2 INCHES CLEAR UNLESS NOTED OTHERWISE.
7. REFLECTIVE BARRIER DELINEATORS SHALL BE MOUNTED ON TOP OF THE BARRIER RAILING IN CONFORMANCE WITH THE TRAFFIC PLANS.
8. APPLY PENETRATING WATER REPELLENT TREATMENT TO ALL EXPOSED SURFACES OF THE BRIDGE BARRIER RAILING.
9. DISCONTINUE HORIZONTAL REINFORCEMENT AT ALL EXPANSION AND CONSTRACTION JOINTS.
10. STRUCTURAL STEEL SHALL CONFORM TO THE REQUIREMENTS OF ASTM A 36. REMOVABLE COVER PLATES SHALL BE POWDER COATED IN ACCORDANCE WITH SECTION 545 OF THE STANDARD SPECIFICATION IN A COLOR TO MATCH THE COLOR OF THE BRIDGE BARRIER RAILING. ALL OTHER STEEL COMPONENTS SHALL BE GALVANIZED IN ACCORDANCE WITH 545 OF THE STANDARD SPECIFICATIONS.
11. COST OF EXPANSION PLATE ASSEMBLY, IN PLACE, SHALL BE INCLUDED IN THE UNIT BID PRICE FOR BRIDGE BARRIER RAILING.
12. CONSTRUCTION JOINTS BETWEEN BARRIER RAILING AND BRIDGE DECK CONCRETE SHALL BE CLEANED AND ROUGHENED PRIOR TO PLACEMENT OF BARRIER RAILING CONCRETE AS REQUIRED BY THE SPECIFICATIONS.
13. FOR DOWEL AND SLEEVE ASSEMBLY SEE SERIAL NO. 514-03-6/6 TITLED "DOWEL ASSEMBLY FOR EXPANSION JOINTS IN 42 INCH CONCRETE WALL BARRIER AND CONCRETE BRIDGE BARRIER RAILING."
14. CHAMFER EXPOSED EDGES OF STRUCTURES 3/4 INCH UNLESS NOTED OTHERWISE.

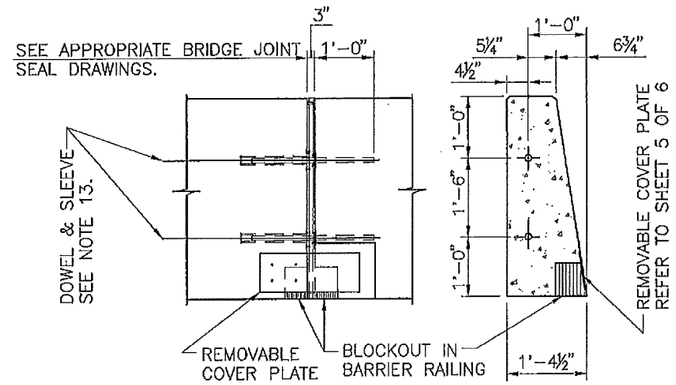

ELEVATION SECTION

EXPANSION JOINT DETAIL

PROVIDE EXPANSION JOINT IN BARRIER RAILING AT EACH BRIDGE EXPANSION JOINT. REFER TO SERIAL NO. 514-03-6/6, DOWEL ASSEMBLY FOR EXPANSION JOINTS IN 42 INCH CONCRETE WALL BARRIER AND CONCRETE BRIDGE BARRIER RAILING, FOR DETAILS OF THE JOINT, FORMING MATERIALS AND DOWELS.

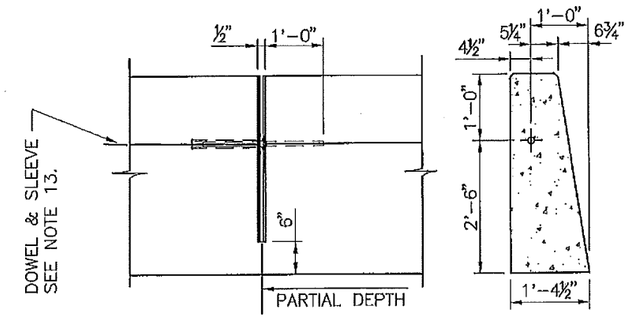

ELEVATION SECTION

CONTRACTION JOINT DETAIL

PROVIDE CONTRACTION JOINTS AT EQUALLY SPACED INTERVALS (15 FT. MIN, 30 FT. MAX), BETWEEN EXPANSION JOINTS OR FOR STRUCTURES WITH INTEGRAL ABUTMENTS. PROVIDE CONTRACTION JOINT AT JOINT BETWEEN DECK AND APPROACH SLAB.

ESTIMATED QUANTITIES

(FOR CONTRACTOR'S INFORMATION ONLY)

ITEM	UNIT	TOTAL
REINFORCING BARS	LBS./FT.	27.1
CONCRETE	CU. YD./FT.	0.14

THE QUANTITIES SHOWN IN THE ABOVE TABLE ARE BASED ON TYPE 42A WITH "T" = 10" AND VARY WITH THE TYPE OF BARRIER RAIL SELECTED.

RAY M. TRUJILLO NEW MEXICO 13514 REGISTERED PROFESSIONAL ENGINEER 4/3/12

	DATE	BY	DESCRIPTION

REVISIONS (OR CHANGE NOTICES)

NEW MEXICO DEPARTMENT OF TRANSPORTATION STANDARD DRAWING

42" CONCRETE BRIDGE BARRIER RAILING GENERAL DETAILS

DESIGNED BY: DRAWN BY: SKL CHECKED BY: YML/TM

514-03-1/6 1 of6

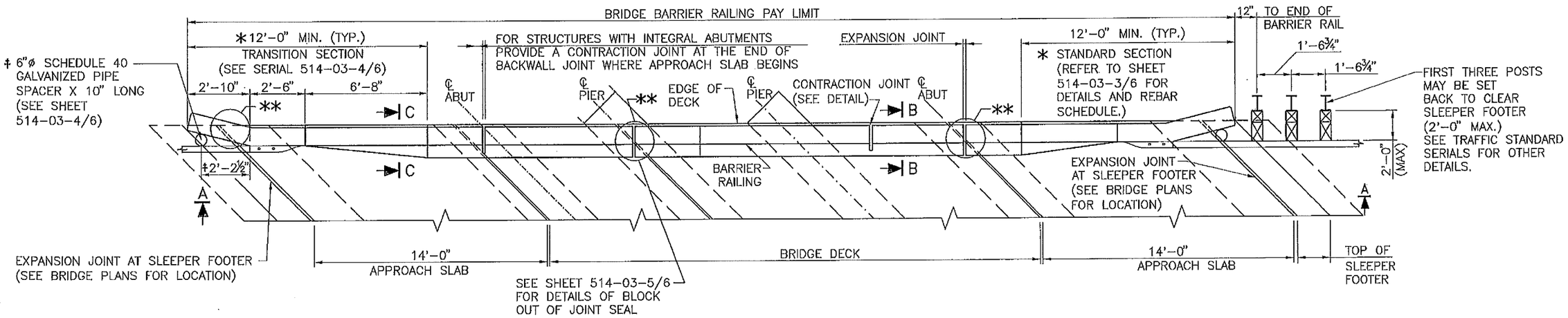

* USE TRANSITION SECTION ONLY WHERE AN ATTACHMENT TO METAL BARRIER IS TO BE MADE. AT ALL OTHER LOCATIONS CARRY STANDARD SECTION THROUGH APPROACH SLAB. (REFER TO SHEET 514-03-4/6 FOR DETAILS AND REBAR SCHEDULE.)

TYPICAL PARTIAL PLAN

** PROVIDE NOTCHES TO ACCOMODATE EXPANSION JOINT EXTENSION ON THE BARRIER RAILING 1'-0" WIDE x 8" HIGH AT EACH ELEMENT.

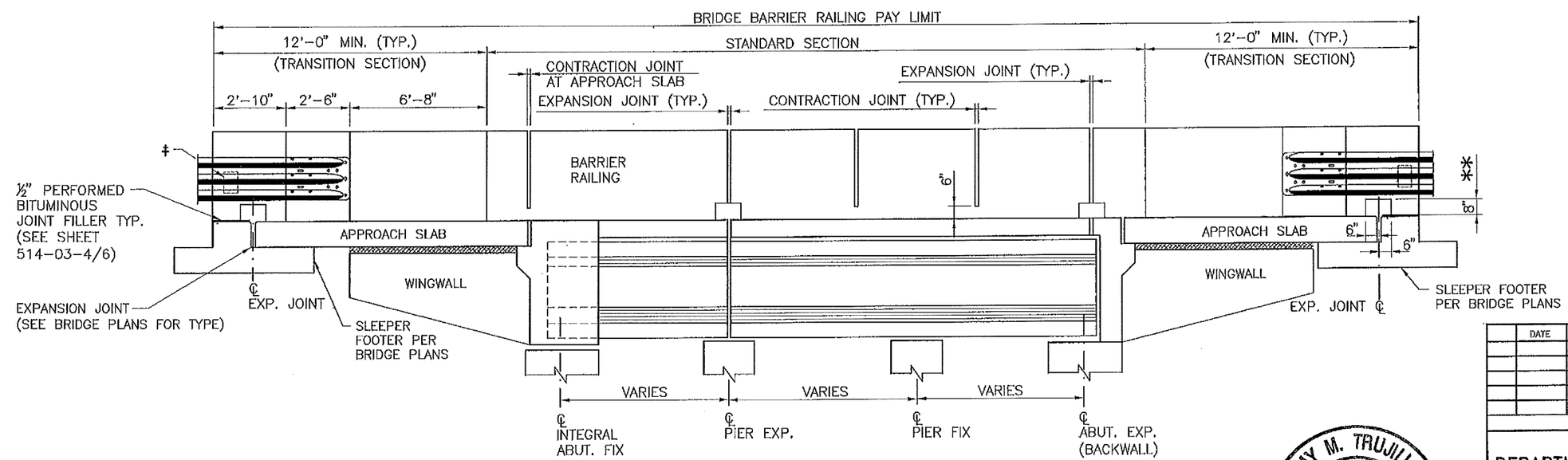

SECTION A-A

	DATE	BY	DESCRIPTION

REVISIONS (OR CHANGE NOTICES)

NEW MEXICO DEPARTMENT OF TRANSPORTATION STANDARD DRAWING

42" CONCRETE BRIDGE BARRIER RAILING GENERAL DETAILS

DESIGNED BY: DRAWN BY: SKL CHECKED BY: YML/TM

514-03-2/6 2 of 6

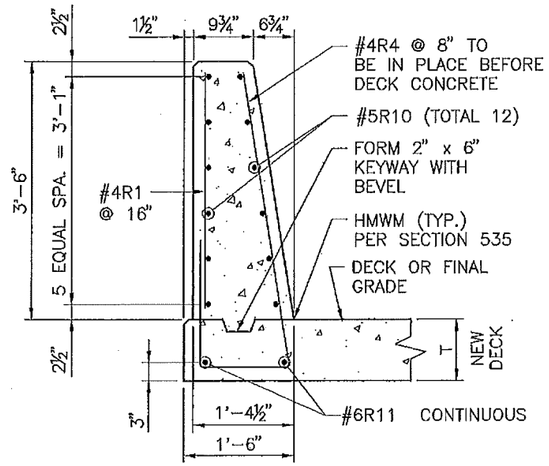

TYPE 42A

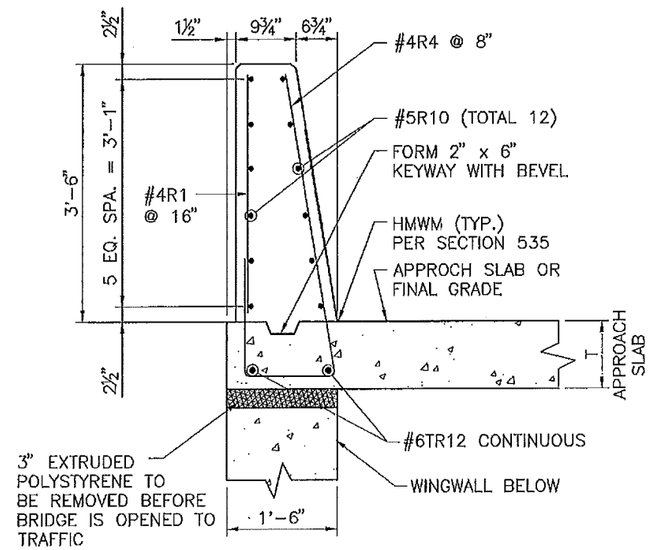

SECTION C-C

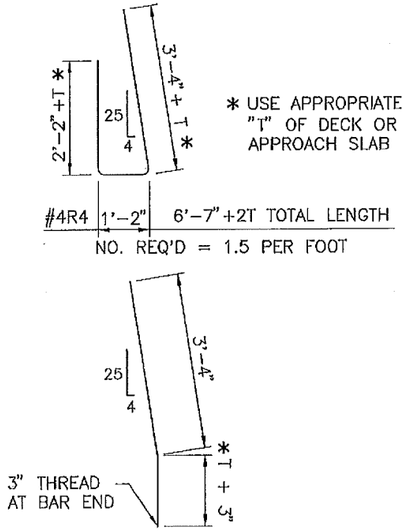

** #4R6 3'-7" + T (TOTAL LENGTH)
NO. REQ'D = 1.5 PER FOOT

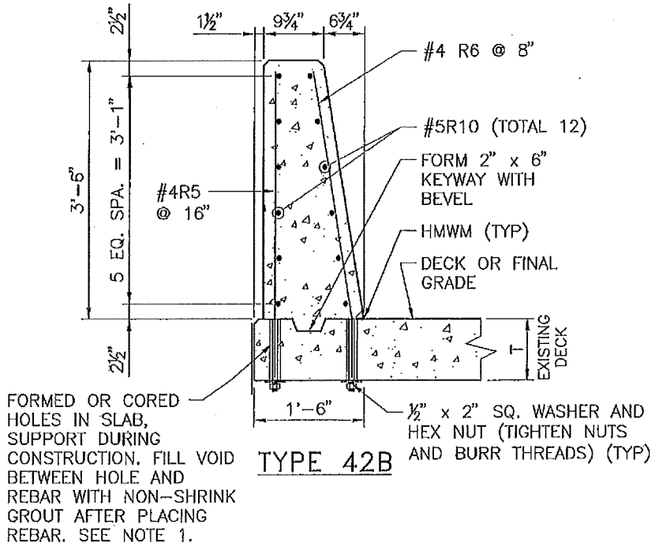

TYPE 42B

SECTION B-B

REBAR SCHEDULE

MARK	LENGTH	NO. REQ'D PER FOOT
#4R1	3'-2"	0.75
** #4R5	3'-7" + T	0.75
#5R10	VARIES	12.00
#6R11	VARIES	2.00
#6TR12	VARIES	2.00

**THREAD ONE END 3"

NOTES:

1. MATERIAL TO BE USED FOR GROUTING SHALL COMPLY WITH SECTION 523 OF THE NEW MEXICO STATE DEPARTMENT OF TRANSPORTATION STANDARD SPECIFICATIONS FOR HIGHWAY AND BRIDGE CONSTRUCTION, LATEST EDITION AND SHALL BE APPROVED BY THE PROJECT MANAGER.
2. ALL METAL PARTS THAT ARE LEFT EXPOSED SHALL BE GALVANIZED.
3. USE THE SAME TYPE OF REINFORCEMENT FOR WALL BARRIER AS USED IN DECK.
4. HIGH MOLECULAR WEIGHT METHACRYLATE (HMWM), EXTRUDED POLYSTYRENE AND PREFORMED BITUMINOUS JOINT FILLER WILL BE INCIDENTAL TO THE COMPLETION OF THE WORK AND WILL NOT BE PAID FOR SEPARATELY.

RAY M. TRUJILLO
NEW MEXICO
13514
4/3/12
REGISTERED PROFESSIONAL ENGINEER

	DATE	BY	DESCRIPTION

REVISIONS (OR CHANGE NOTICES)

NEW MEXICO DEPARTMENT OF TRANSPORTATION STANDARD DRAWING

42" CONCRETE BRIDGE BARRIER RAILING STANDARD SECTION AND DETAILS

DESIGNED BY: ____ DRAWN BY: SKL CHECKED BY: YML/TM

514-03-3/6 3 of 6

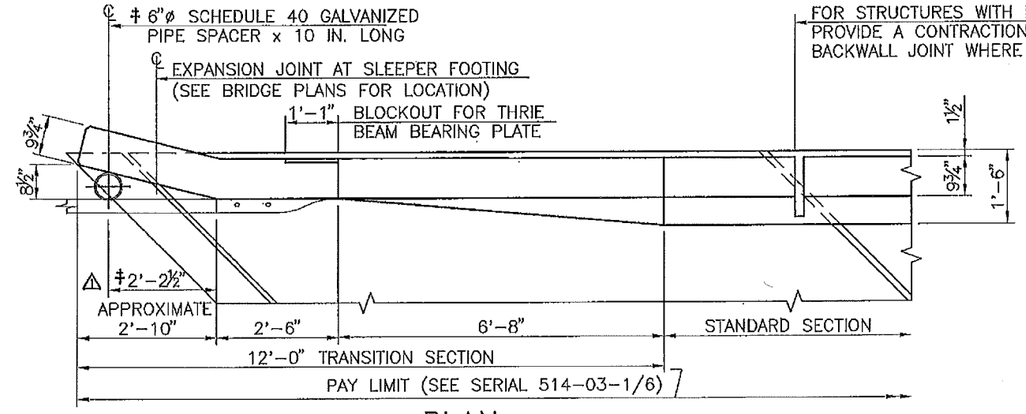

PLAN

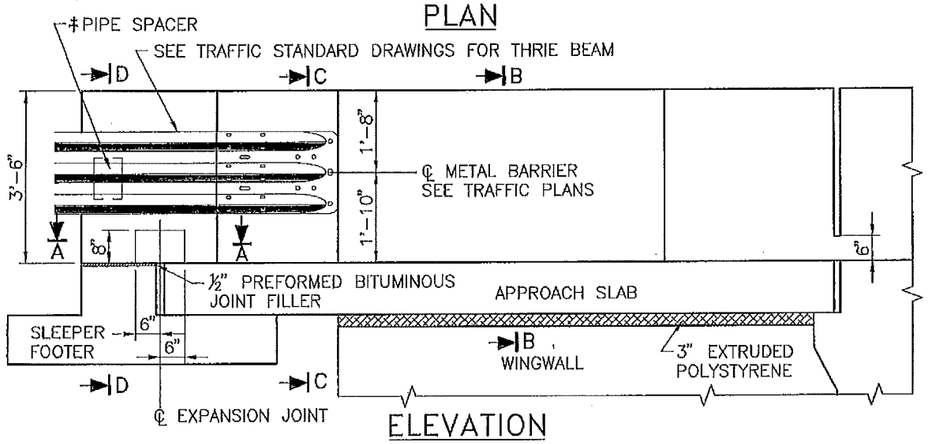

ELEVATION

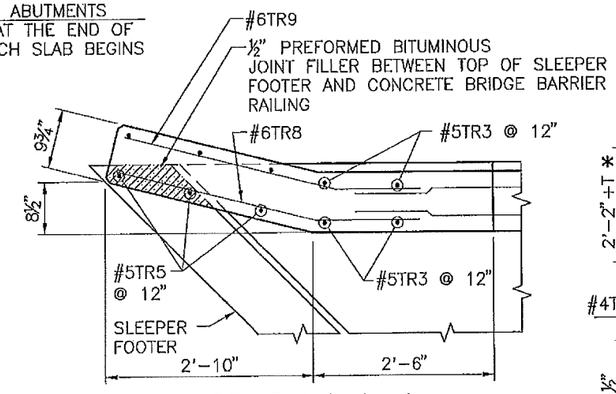

SECTION A-A

‡ ONE ⅞" HIGH TENSILE STRENGTH BOLT IS REQUIRED FOR THE ATTACHMENT OF THE SCHEDULE 40 PIPE SPACER TO THE CONCRETE BARRIER. LENGTH TO BE DETERMINED IN THE FIELD BY THE PROJECT MANAGER. HOLES FOR BOLTS SHALL BE 1" DIAMETER AND SHALL BE EITHER FORMED OR CORE DRILLED. MOVE SPACER RIGHT OR LEFT AS REQUIRED TO FIT SNUGLY BETWEEN BARRIER AND THRIE BEAM.

NOTE:
BEVEL VARIES FROM 4" TO 0" IN 11 EQUAL INCREMENTS. "V" VARIES FROM 1'-2" TO 5" IN 11 EQUAL INCREMENTS.

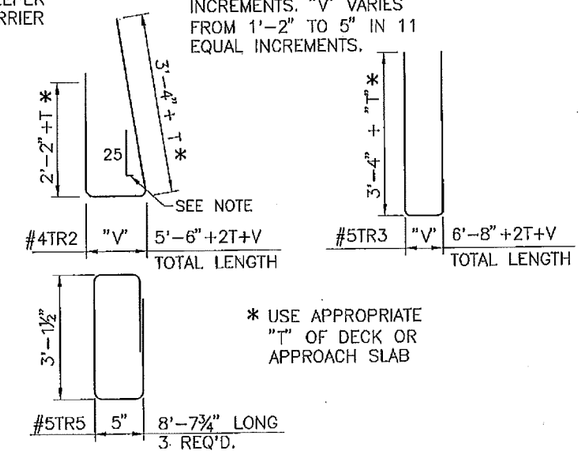

* USE APPROPRIATE "T" OF DECK OR APPROACH SLAB

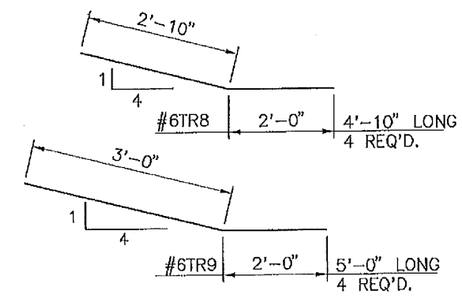

ESTIMATED QUANTITIES
(FOR ONE TRANSITION)

ITEM	UNIT	TOTAL
REINFORCING BARS	LBS.	295
CONCRETE	CU. YDS.	1.5

FOR CONTRACTOR'S INFORMATION ONLY

#4TR1	3'-2"	6 REQ'D.
#5TR10	VARIES	12 REQ'D.
#6TR12	VARIES	2 REQ'D.

REBAR SCHEDULE
(FOR ONE TRANSITION)

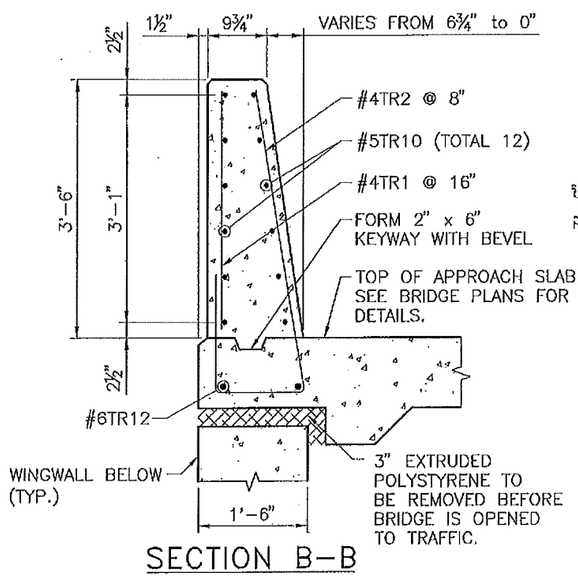

SECTION B-B

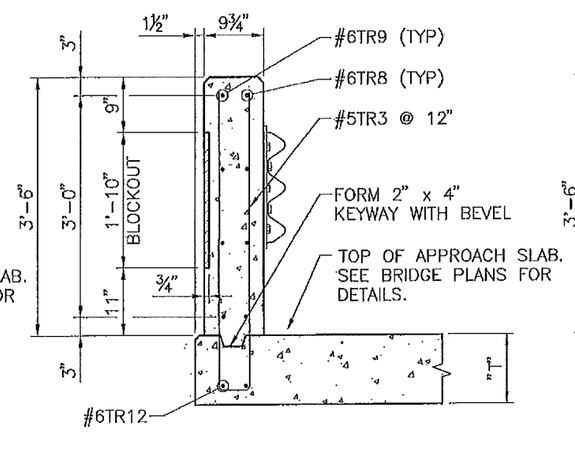

SECTION C-C

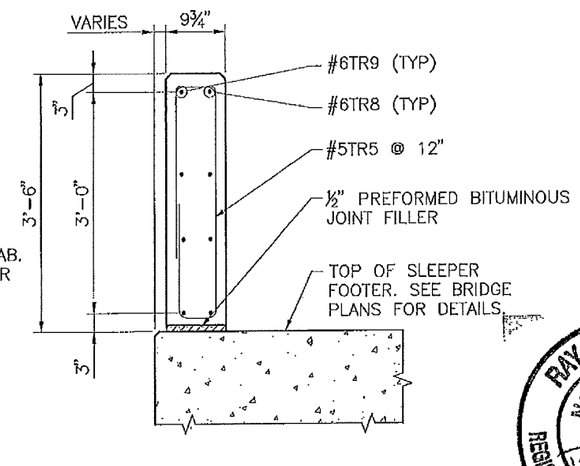

SECTION D-D

RAY M. TRUJILLO
NEW MEXICO
13514
12/27/12
REGISTERED PROFESSIONAL ENGINEER

	DATE	BY	DESCRIPTION
1	12/27/12	TM	REVISED DIMENSION

REVISIONS (OR CHANGE NOTICES)

NEW MEXICO DEPARTMENT OF TRANSPORTATION STANDARD DRAWING

42" CONCRETE BRIDGE BARRIER RAILING TRANSITION SECTION AND DETAILS

DESIGNED BY: ___ DRAWN BY: SKL CHECKED BY: YML/TM

514-03-4/6 4 of 6

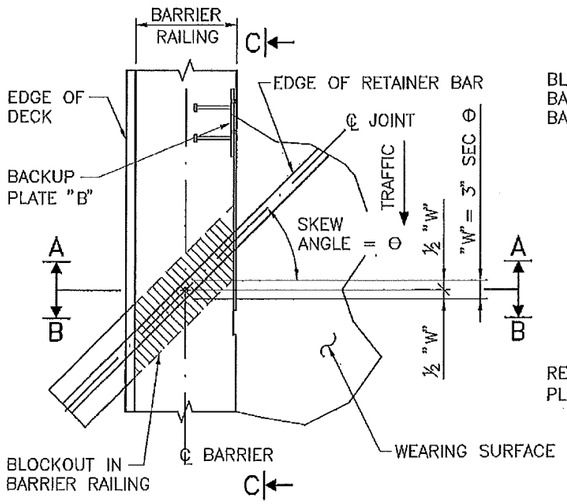

PART PLAN–SKEW JOINT AT CONCRETE BARRIER RAILING

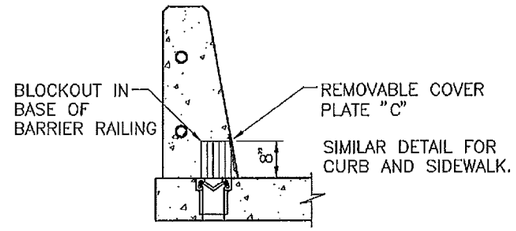

SECTION A–A

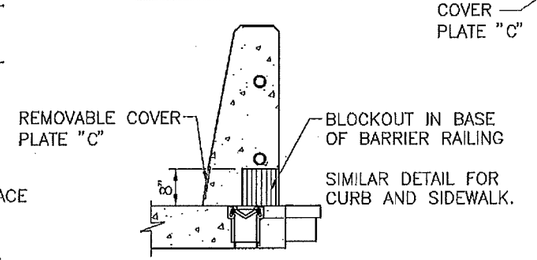

SECTION B–B

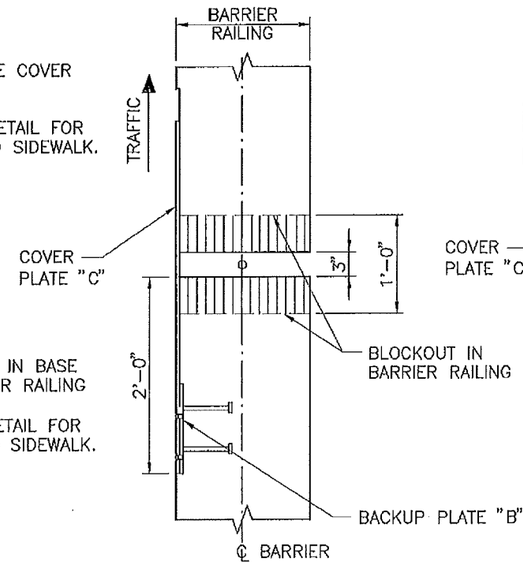

NORMAL

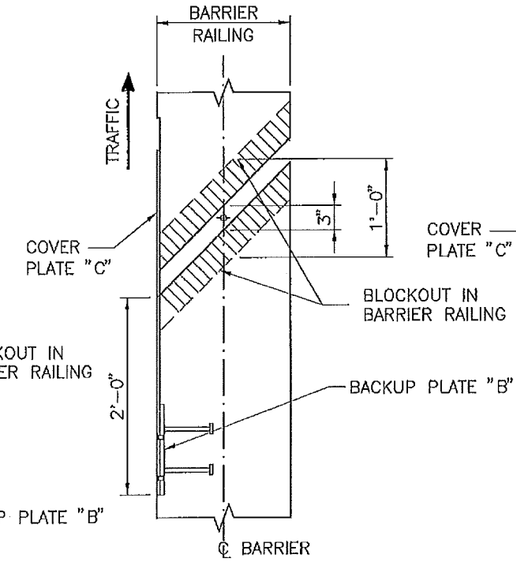

RF SKEW

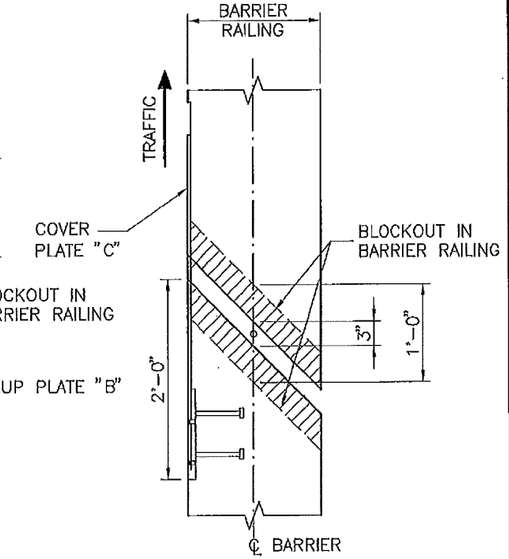

LF SKEW

BACKUP PLATE "B" LOCATIONS IN PLAN VIEW

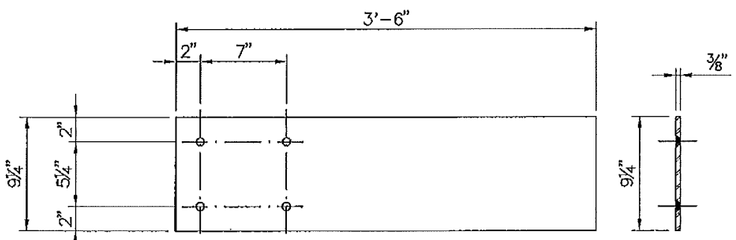

REMOVABLE COVER PLATE "C"

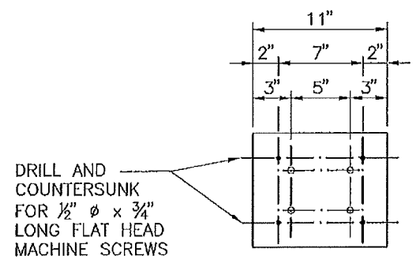

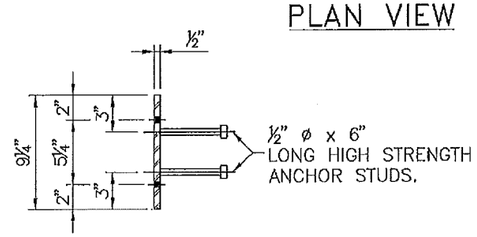

BACKUP PLATE "B"

NOTE:

1. SEE GENERAL NOTE 10 ON SHEET 514–03–1/6.
2. APPLICABLE FOR SKEWS UP TO 45 DEGREES. IF THE SKEW IS LARGER THAN 45 DEGREES THEN THE ENGINEER MUST ENSURE THAT THE STUDS ON THE BACKUP PLATE HAVE ADEQUATE CONCRETE COVER.

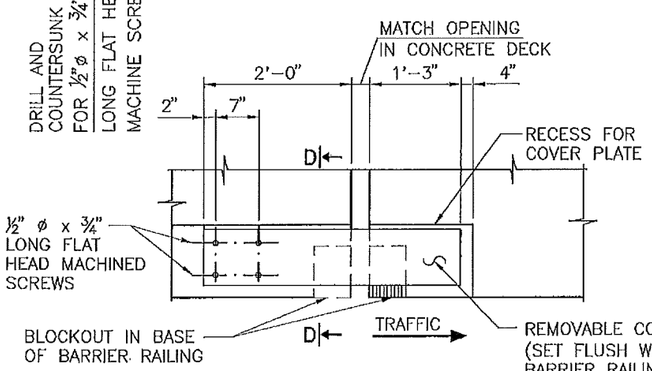

ELEVATION C–C

PROVIDE EXPANSION JOINT IN BARRIER RAILING AT EACH BRIDGE EXPANSION JOINT. REFER TO SERIAL NO. 514–03–6/6 DOWEL ASSEMBLY FOR EXPANSION JOINTS IN 42 INCH CONCRETE WALL BARRIER AND CONCRETE BRIDGE BARRIER RAILING FOR DETAILS OF THE JOINT, FORMING MATERIALS AND DOWELS.

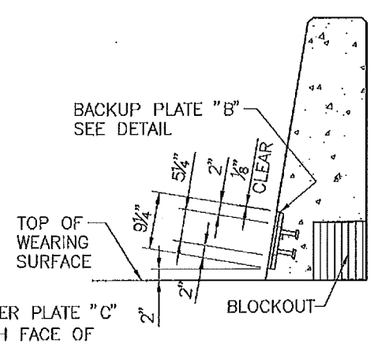

SECTION D–D

ESTIMATED QUANTITIES

(FOR ONE EXPANSION PLATE ASSEMBLY)

ITEM	UNIT	TOTAL
STRUCTURAL STEEL	LBS.	57

FOR CONTRACTOR'S INFORMATION ONLY

	DATE	BY	DESCRIPTION

REVISIONS (OR CHANGE NOTICES)

NEW MEXICO
DEPARTMENT OF TRANSPORTATION
STANDARD DRAWING

42" CONCRETE BRIDGE BARRIER RAILING DETAILS AT JOINT SEALS

DESIGNED BY: ___ DRAWN BY: SKL CHECKED BY: YML/TM

514–03–5/6 5 of 6

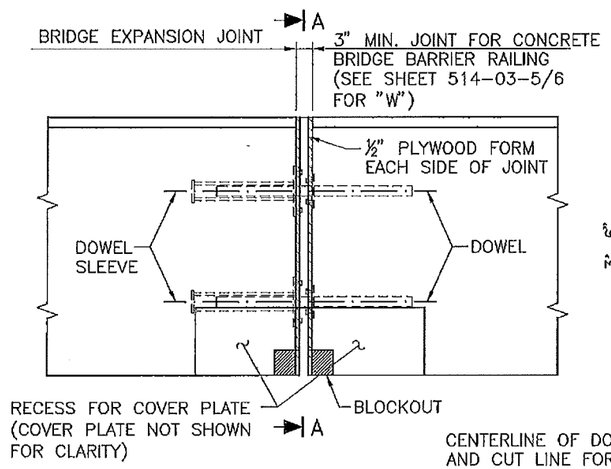

ASSEMBLY DETAIL

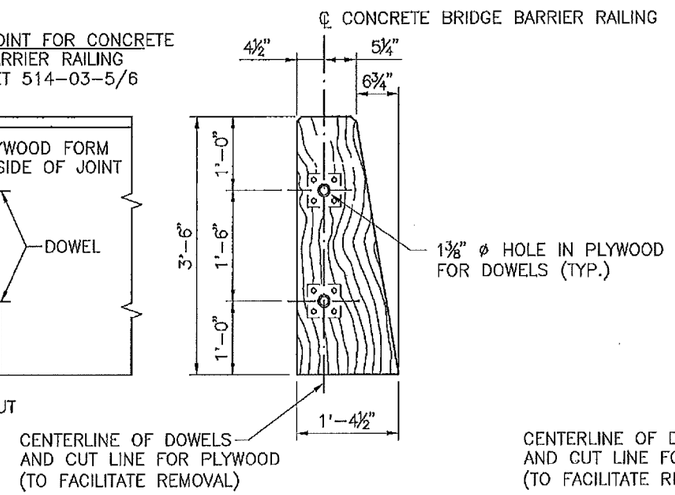

SECTION A–A

CONCRETE BRIDGE BARRIER RAILING

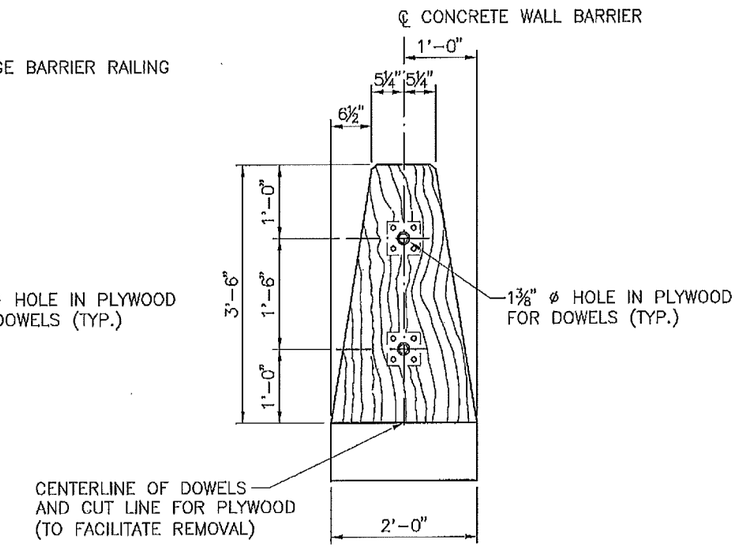

SECTION A–A

CONCRETE WALL BARRIER

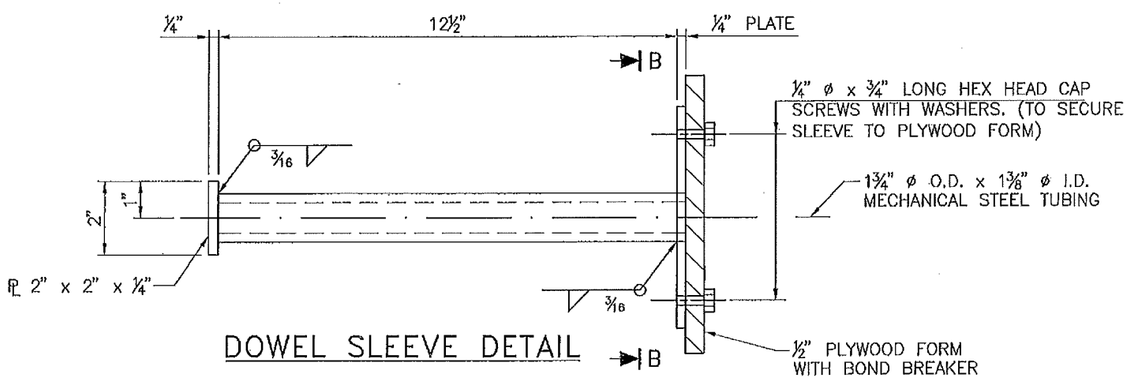

DOWEL SLEEVE DETAIL

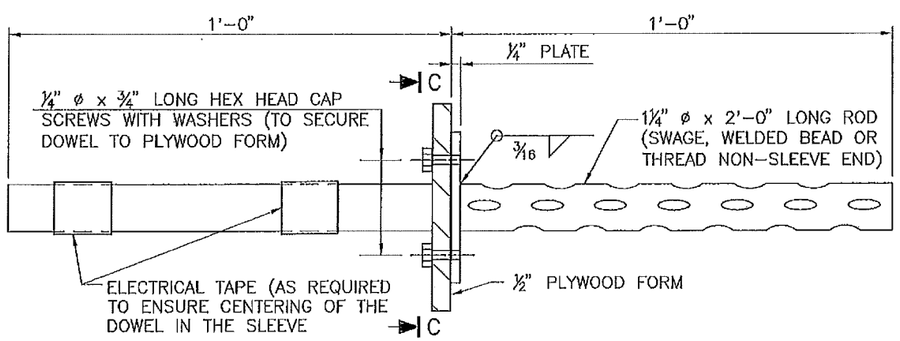

DOWEL DETAIL

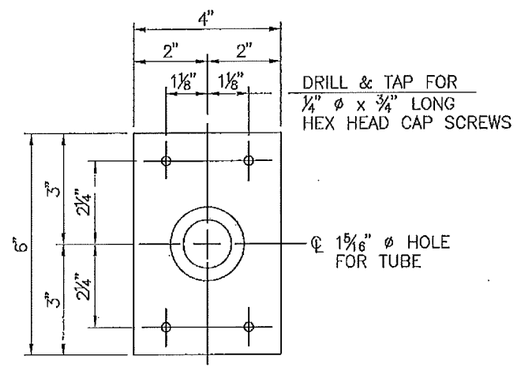

SECTION B–B

¼" THICK PLATE

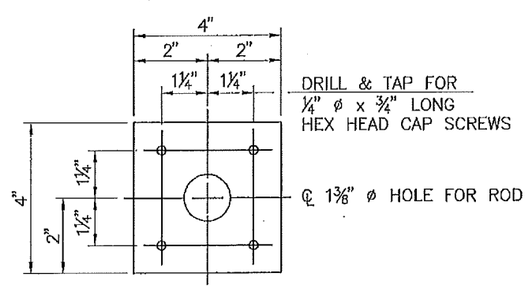

SECTION C–C

1/4 IN. THICK PLATE

GENERAL NOTES

1. WORKMANSHIP AND MATERIALS SHALL CONFORM TO THE NEW MEXICO DEPARTMENT OF TRANSPORTATION'S STANDARD SPECIFICATIONS FOR HIGHWAY AND BRIDGE CONSTRUCTION (CURRENT EDITION), APPLICABLE SUPPLEMENTAL SPECIFICATIONS AND SPECIAL PROVISIONS.
2. STRUCTURAL STEEL SHALL CONFORM TO ASTM A–36 UNLESS OTHERWISE NOTED ON THE DETAILS, AND SHALL BE GALVANIZED IN ACCORDANCE WITH SECTION 545 OF THE STANDARD SPECIFICATIONS.
3. THE SLEEVE ASSEMBLY SHALL BE SET PARALLEL TO THE BRIDGE DECK GRADE AND THE OUTSIDE FACE OF THE CONCRETE BARRIER RAILING.
4. AFTER CONCRETE HAS TAKEN INITIAL SET, REMOVE STYROFOAM FILLER AND PLYWOOD FORMS FROM THE JOINT.
5. PLYWOOD FORMS AND STYROFOAM FILLER SHALL BE CUT TO THE CROSS SECTION OF THE CONCRETE BARRIER RAILING. PLYWOOD FORMS SHALL BE COATED WITH AN APPROVED BOND–BREAKER.
6. FOR MOVEMENT LENGTHS IN EXCESS OF 300 FEET INCREASE JOINT OPENING "W" AS REQUIRED.
7. THE COST OF ALL MATERIALS AND INSTALLATION FOR THE JOINTS SHALL BE CONSIDERED INCIDENTAL TO THE COST OF THE BRIDGE BARRIER RAILING OR CONCRETE WALL BARRIER AND THEREFORE NO DIRECT PAYMENT WILL BE MADE.
8. GALVANIZE DOWEL AND DOWEL SLEEVE ASSEMBLY.

	DATE	BY	DESCRIPTION

REVISIONS (OR CHANGE NOTICES)

NEW MEXICO DEPARTMENT OF TRANSPORTATION STANDARD DRAWING

DOWEL ASSEMBLY FOR EXPANSION JOINTS IN 42" CONCRETE WALL BARRIER AND CONCRETE BRIDGE BARRIER RAILING

DESIGNED BY: ____ DRAWN BY: SKL CHECKED BY: YML/TM

514-03-6/6 6 of 6

TABLE OF ALLOWABLE MOVEMENT LENGTHS AND ACCEPTABLE JOINT SEALS

SKEW	MOVEMENT LENGTH (FEET)				MANUFACTURER		JOINT MOVEMENT (INCHES)	* "A" [DIMENSION AT MID TEMP T_0] (INCHES)
	CONCRETE BRIDGE		STEEL BRIDGE		WATSON BOMAN ACME CORP. "WABO STRIP SEAL" (MODEL NO.)	D.S. BROWN CO. INC. "STEELFLEX" (MODEL NO.)		
	ELEVATION GREATER THAN 4,500 FEET (0° TO 80° F) T_0 = 40° F	ELEVATION LESS THAN 4,500 FEET (10° TO 90° F) T_0 = 50° F	ELEVATION GREATER THAN 4,500 FEET (−20° TO 110° F) T_0 = 45° F	ELEVATION LESS THAN 4,500 FEET (0° TO 120° F) T_0 = 60° F				
0° to 15°	0–427	0–556	0–342	0–427	SE–400	SSA2	0 TO 4	2
15° to 30°	0–442	0–575	0–354	0–442	SE–400	SSA2	0 TO 4	2
30° to 45°	0–493	0–642	0–395	0–493	SE–400	SSA2	0 TO 4	2

* MAXIMUM "A" IS EQUAL TO TOTAL JOINT MOVEMENT

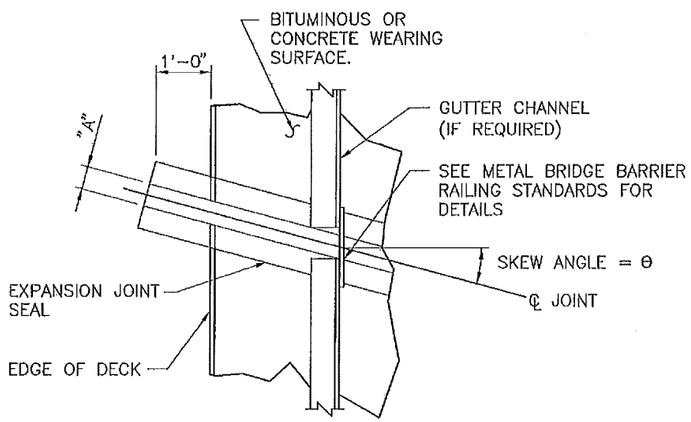

PART PLAN – SKEWED JOINT WITH METAL RAILING

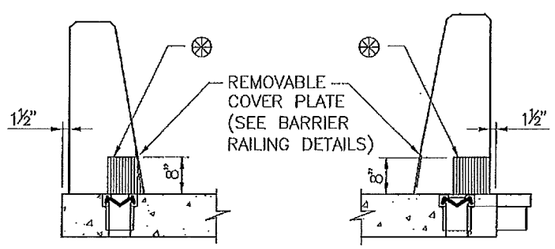

SECTION A–A SECTION B–B

SIMILAR DETAIL FOR CURB AND SIDEWALK.

⊛ RECESS IN BASE OF WALL BARRIER.

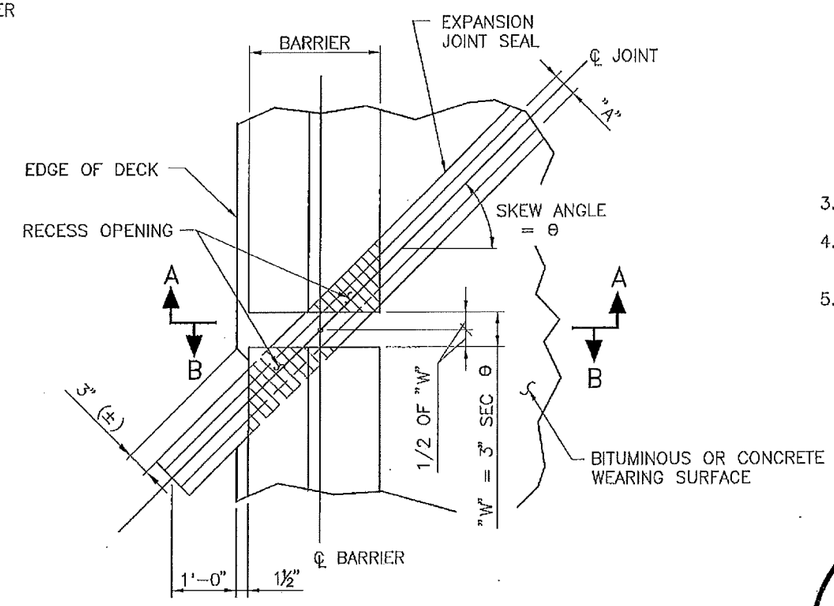

PART PLAN–SKEW JOINT WITH CONCRETE BARRIER RAILING

GENERAL NOTES:

1. JOINT SEALS SHALL BE INSTALLED IN ACCORDANCE WITH MANUFACTURER'S RECOMMENDATIONS. SEALS HAVING EQUAL PERFORMANCE CHARACTERISTICS TO THOSE SHOWN MAY BE SUBSTITUTED IF THE ENGINEER'S WRITTEN APPROVAL IS OBTAINED AT LEAST TWO WEEKS PRIOR TO THE DAY OF THE BID OPENING.

2. JOINT SEAL SIZES ARE BASED ON AN INSTALLATION TEMPERATURE OF T_I (DEGREES F, TEMPERATURE OF GIRDER) AND JOINT MOVEMENTS FOR A RANGE OF TEMPERATURES AS NOTED IN THE TABLE ON THIS SHEET. FOR INSTALLATION TEMPERATURES BELOW T_0, INCREASE DIMENSION "A" BY THE AMOUNT SHOWN BELOW. FOR INSTALLATION TEMPERATURES ABOVE T_0, DECREASE DIMENSION "A" BY THE AMOUNT SHOWN BELOW. MEASURE THE GIRDER TEMPERATURE T_I AT THE ANTICIPATED TIME OF DECK PLACEMENT. MEASURE AT MID HEIGHT OF GIRDER.

   FOR CONCRETE BRIDGES:
   CHANGE IN "A" = 0.000072 x L x COS θ x ΔT

   FOR STEEL BRIDGES:
   CHANGE IN "A" = 0.000078 x L x COS θ x ΔT

   WHERE:
   CHANGE IN "A" IS IN INCHES.
   L = MOVEMENT LENGTH IN FEET (SEE SUPERSTRUCTURE DETAILS OF BRIDGE PLANS.)
   θ = SKEW ANGLE
   T_0 = MIDPOINT TEMPERATURE
   T_I = INSTALLATION TEMPERATURE OF GIRDER
   ΔT = CHANGE IN TEMPERATURE FROM "T_I" IN DEGREES FAHRENHEIT.

   EXAMPLE:
   (CONCRETE BRIDGE ELEVATION GREATER THAN 4,500 FEET "T_0" = 40°F)

   GIVEN: T_I = 73°F, L = 100 FEET, θ = 30°, "A" = 2".
   CONCRETE BRIDGE, ΔT = 73° − 40° = 33°F

   CHANGE IN "A" = 0.000072 x 100 x COS 30° x 33 = 0.2058": SAY ¼".
   THEREFORE "A" AT T_I = 73°F = 2" − ¼" = 1¾".

3. UNLESS OTHERWISE SPECIFIED ON THE PLANS, USE TYPE A INSTALLATION.

4. UNLESS OTHERWISE SPECIFIED ON THE PLANS, ALL STRUCTURES SHALL BE CONSIDERED SUBJECTED TO SEVERE CLIMATE.

5. ALL SURFACES OF STEEL COMPONENTS OF THE SEAL, EXCEPT THOSE WHICH WILL BE IN CONTACT WITH THE ELASTOMERIC SEALING ELEMENT, SHALL BE GIVEN A PROTECTIVE COATING IN ACCORDANCE WITH THE SECTION 562 OF THE NMDOT STANDARD SPECIFICATION, CURRENT EDITION.

DATE	BY	DESCRIPTION

REVISIONS (OR CHANGE NOTICES)

NEW MEXICO
DEPARTMENT OF TRANSPORTATION
STANDARD DRAWING

SYSTEM 1
BRIDGE JOINT STRIP SEAL
GENERAL

DESIGNED BY: DRAWN BY: SKL CHECKED BY: YML/TM

562-01-1/3 1 of 3

STRIP SEAL TYPE (SE)

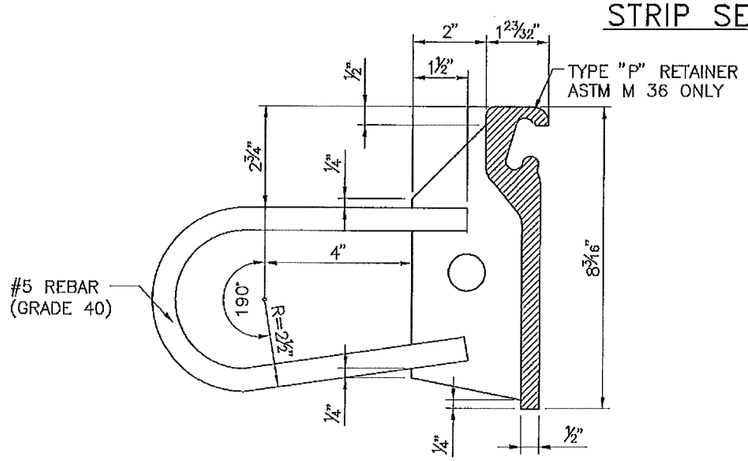

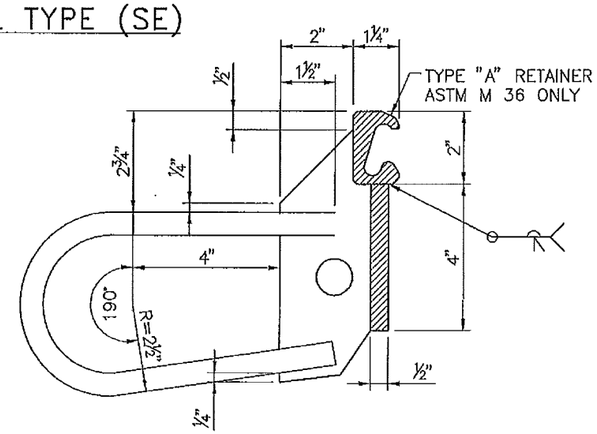

WATSON–BOWMAN ACME CORP.

STEELFLEX SERIES SEAL A2R

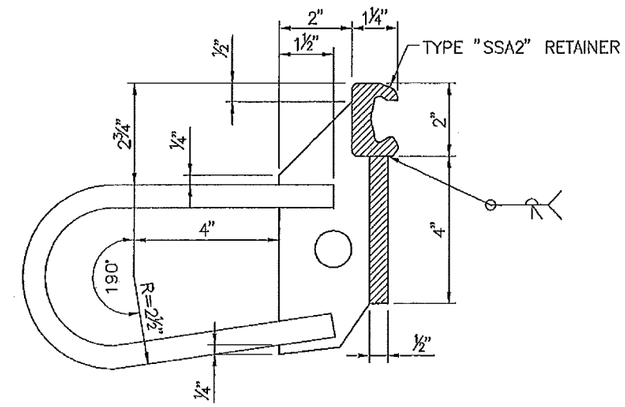

D.S. BROWN CO.

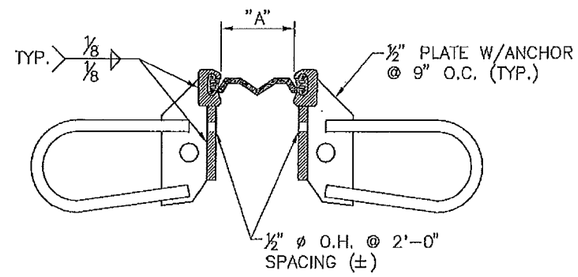

TYPICAL SECTION

* REMOVE BOLTS AND GRIND SURFACE OF RETAINER BAR SMOOTH AFTER INSTALLATION.

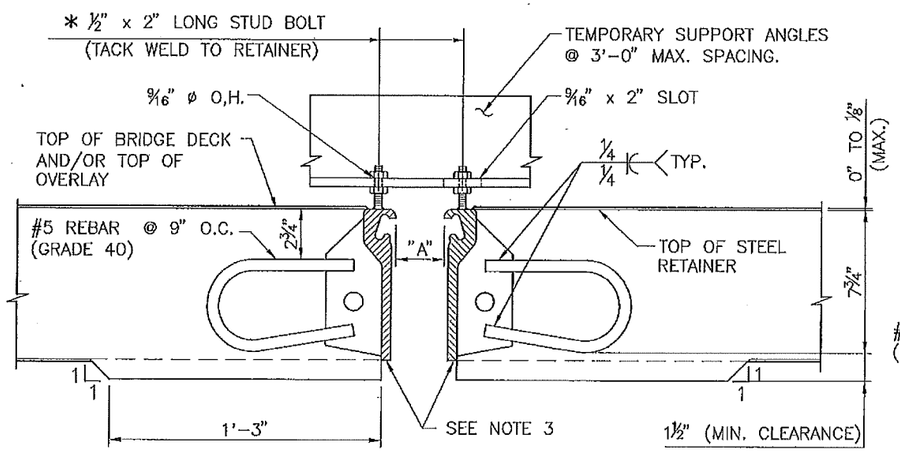

ERECTION DETAIL

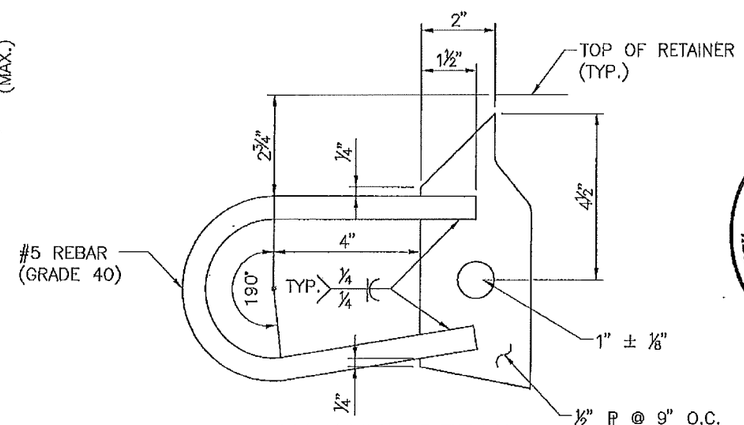

ANCHOR DETAIL

GENERAL NOTES

1. SEE SERIAL 562–01–1/3 FOR APPROPRIATE SEAL MODEL NUMBERS AND DIMENSION "A."
2. THE ½ INCH PLATE MAY BE ALTERED SLIGHTLY FROM THE DETAIL SHOWN TO BETTER FIT THE STEEL RETAINER PROVIDED.
3. THE TEMPORARY SUPPORT ANGLE SHALL BE SECURED IN POSITION SO AS TO PROVIDE FOR LATERAL AND VERTICAL ADJUSTMENT OF THE RETAINER BARS AND PERMIT FINAL FINISHING OF THE CONCRETE SURFACE AS APPROVED BY THE PROJECT MANAGER.
4. SHOULD THE DEPTHS OF THE WATSON–BOWMAN & ACME RETAINERS EXCEED THE DEPTH OF THE BRIDGE DECK, THE RETAINERS SHALL BE NOTCHED TO CLEAR THE GIRDERS.

	DATE	BY	DESCRIPTION

REVISIONS (OR CHANGE NOTICES)

NEW MEXICO
DEPARTMENT OF TRANSPORTATION
STANDARD DRAWING

SYSTEM 1
BRIDGE JOINT STRIP SEAL
TYPE "A" INSTALLATION

DESIGNED BY: ___ DRAWN BY: SKL CHECKED BY: YML/TM

562–01–2/3 2 of 3

CONCRETE BRIDGE, ELEVATION GREATER THAN 4,500 FEET (MIN./MAX. DESIGN TEMP. 0°F TO 80°F)

JOINT MOVEMENT (INCH)	INSTALLATION TEMP. "To" (°F)	JOINT WIDTH "A" (INCH)	MATERIAL WIDTH "W" (INCH)	MATERIAL DEPTH "D" (INCH)
1/2	40	1	1 1/4	3
1	40	1 9/16	2	3
1 1/2	40	2	2 1/2	3
2	40	2 3/8	3	3
2 1/2	40	3	4	3
3	40	4	5	4
				3" MIN.

STEEL BRIDGE, ELEVATION GREATER THAN 4,500 FEET (MIN./MAX. DESIGN TEMP. −20°F TO 110°F)

JOINT MOVEMENT (INCH)	INSTALLATION TEMP. "To" (°F)	JOINT WIDTH "A" (INCH)	MATERIAL WIDTH "W" (INCH)	MATERIAL DEPTH "D" (INCH)
1/2	45	1	1 1/4	3
1	45	1 9/16	2	3
1 1/2	45	2	2 1/2	3
2	45	2 3/8	3	3
2 1/2	45	3	4	3
3	45	4	5	4
				3" MIN.

CONCRETE BRIDGE, ELEVATION LESS THAN 4.500 FEET (MIN./MAX. DESIGN TEMP. 10°F TO 90°F)

JOINT MOVEMENT (INCH)	INSTALLATION TEMP. "To" (°F)	JOINT WIDTH "A" (INCH)	MATERIAL WIDTH "W" (INCH)	MATERIAL DEPTH "D" (INCH)
1/2	50	1	1 1/4	3
1	50	1 9/16	2	3
1 1/2	50	2	2 1/2	3
2	50	2 3/8	3	3
2 1/2	50	3	4	3
3	50	4	5	4
				3" MIN.

STEEL BRIDGE, ELEVATION LESS THAN 4,500 FEET (MIN./MAX. DESIGN TEMP. 0°F TO 120°F)

JOINT MOVEMENT (INCH)	INSTALLATION TEMP. "To" (°F)	JOINT WIDTH "A" (INCH)	MATERIAL WIDTH "W" (INCH)	MATERIAL DEPTH "D" (INCH)
1/2	60	1	1 1/4	3
1	60	1 9/16	2	3
1 1/2	60	2	2 1/2	3
2	60	2 3/8	3	3
2 1/2	60	3	4	3
3	60	4	5	4
				3" MIN.

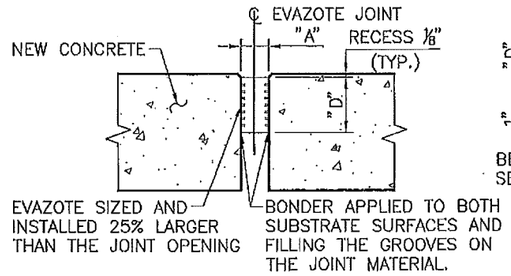

DETAIL 1 (FOR NEW BRIDGE)

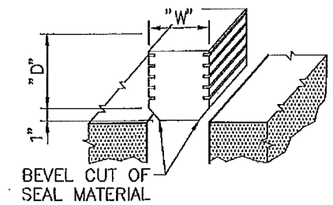

PERFORMANCE AND INSTALLATION ENHANCEMENT BEVEL CUT DETAIL

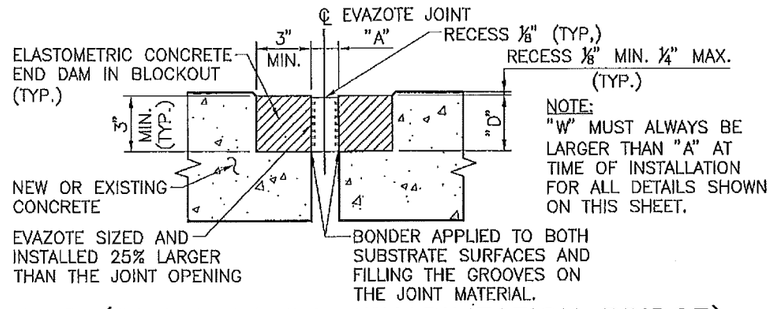

DETAIL 2 (FOR NEW OR REHABILITATION BRIDGE)

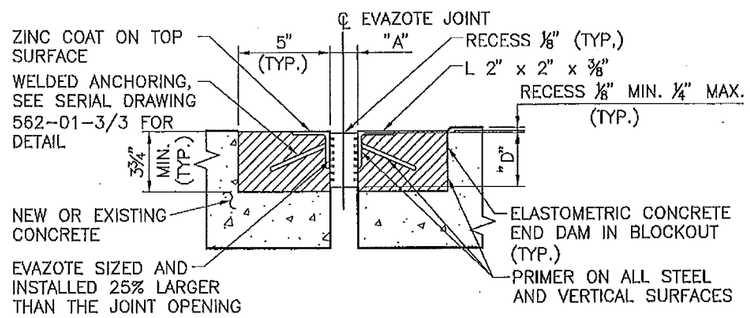

DETAIL 3 (FOR NEW OR REHABILITATION BRIDGES OF ABUSIVE CONDITIONS)

GENERAL USE FOR CONCRETE STRUCTURES, EXCLUDING BRIDGES

JOINT MOVEMENT (INCH)	INSTALLATION TEMP. "To" (°F)	JOINT WIDTH "A" (INCH)	MATERIAL WIDTH "W" (INCH)	MATERIAL DEPTH "D" (INCH)
1/2	70	1	1 1/4	3
1	70	1 9/16	2	3
1 1/2	70	2	2 1/2	3
2	70	2 3/8	3	3
2 1/2	70	3	4	3
3	70	4	5	4
				3" MIN.

GENERAL NOTES:

1. WORKMANSHIP AND MATERIALS SHALL CONFORM TO THE NEW MEXICO STATE DEPARTMENT OF TRANSPORTATION'S STANDARD SPECIFICATIONS FOR HIGHWAY AND BRIDGE CONSTRUCTION, CURRENT EDITION, APPLICABLE SUPPLEMENTAL SPECIFICATIONS AND SPECIAL PROVISIONS.
2. JOINT SEALS SHALL BE INSTALLED IN ACCORDANCE WITH MANUFACTURER'S RECOMMENDATIONS AND SELECTED FROM THE APPROVED PRODUCTS LIST OF NMDOT.
3. JOINT SEAL SIZES ARE BASED ON AN INSTALLATION TEMPERATURE OF T_I (DEGREES F, TEMPERATURE OF GIRDER) AND JOINT MOVEMENTS FOR A RANGE OF TEMPERATURES AS NOTED IN THE TABLE ON THIS SHEET. FOR INSTALLATION TEMPERATURES BELOW To, INCREASE DIMENSION "A" BY THE AMOUNT SHOWN BELOW. FOR INSTALLATION TEMPERATURES ABOVE To, DECREASE DIMENSION "A" BY THE AMOUNT SHOWN BELOW. MEASURE THE GIRDER TEMPERATURE T_I AT THE ANTICIPATED TIME OF DECK PLACEMENT. MEASURE AT MID HEIGHT OF GIRDER.

   FOR CONCRETE BRIDGES:
   CHANGE IN "A" = 0.000072 x L x COS θ x ΔT

   FOR STEEL BRIDGES:
   CHANGE IN "A" = 0.000078 x L x COS θ x ΔT

   WHERE:
   CHANGE IN "A" IS IN INCHES.
   L = MOVEMENT LENGTH IN FEET (SEE SUPERSTRUCTURE DETAILS OF BRIDGE PLANS.)
   θ = SKEW ANGLE
   To = MIDPOINT TEMPERATURE
   T_I = INSTALLATION TEMPERATURE OF GIRDER
   ΔT = CHANGE IN TEMPERATURE FROM "T_I" IN DEGREES FAHRENHEIT.

   EXAMPLE:
   (CONCRETE BRIDGE ELEVATION GREATER THAN 4,500 FEET "To" = 40°F)

   GIVEN: T_I = 73°F, L = 100 FEET, θ = 30°, "A" = 2".
   CONCRETE BRIDGE, ΔT = 73° − 40° = 33°F

   CHANGE IN "A" = 0.000072 x 100 x COS 30° x 33 = 0.2058": SAY ¼". THEREFORE "A" AT T_I = 73°F = 2" − ¼" = 1¾".
4. UNLESS OTHERWISE SPECIFIED, THE CONTRACTOR HAS THE OPTION OF USING DETAIL 1 OR DETAIL 2 OR DETAIL 3 SHOWN ON THIS SHEET FOR JOINT SEAL INSTALLATION.
5. WHEN JOINT OPENINGS ARE GREATER THAN 3 INCHES, PERFORMANCE AND INSTALLATION ENHANCEMENT (P.I.E.) BEVEL CUT IS RECOMMENDED AS AN EASIER WAY OF INSTALLING THE SEAL MATERIAL.
6. FOR MORE RELEVANT INFORMATION TO THIS DRAWING, SEE SECTION 564 OF NMDOT STANDARD SPECIFICATION, CURRENT EDITION.

	DATE	BY	DESCRIPTION

REVISIONS (OR CHANGE NOTICES)

NEW MEXICO DEPARTMENT OF TRANSPORTATION STANDARD DRAWING

PREFORMED CLOSED CELL FOAM BRIDGE JOINT SEAL

DESIGNED BY: TM DRAWN BY: SKL CHECKED BY: YML/TM

564-01-1/1 1 of 1

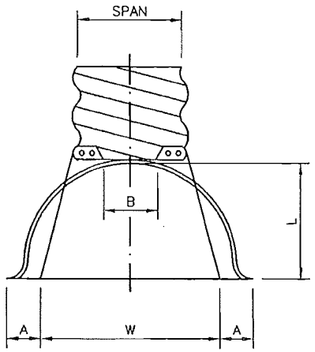

PLAN

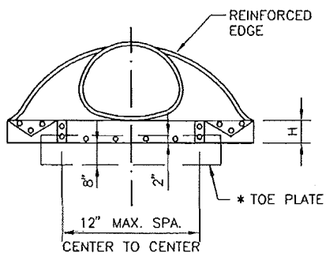

ELEVATION

NOTE: SIZES EQUIVALENT TO THE ABOVE, USING 3" x 1" CORRUGATIONS, MAY BE USED PROVIDING THAT THEY MEET THE SIZES SHOWN UNDER TABLE 6 OF SERIAL 206-04-1/3 THRU 206-04-3/3.

PIPE ARCH DIMENSIONS		GALVANIZED THICKNESS GA.	DIMENSIONS					APPROX. SLOPE	BODY
SPAN (IN.)	RISE (IN.)		A (IN.) (± 1")	B (IN.) (MAX.)	H (IN.) (± 1")	L (IN.) (± 1½")	W (IN.) (± 2")		
17	13	16	7	9	6	19	30	2 1/2:1	1 PC.
21	15	16	7	10	6	23	36	2 1/2:1	1 PC.
24	18	16	8	12	6	28	42	2 1/2:1	1 PC.
28	20	16	9	14	6	32	48	2 1/2:1	1 PC.
35	24	14	10	16	6	39	60	2 1/2:1	1 PC.
42	29	14	12	18	6	46	75	2 1/2:1	1 PC.
49	33	12	13	21	9	53	85	2 1/2:1	2 PC.
57	38	12	18	26	12	63	90	2 1/2:1	2 PC.
64	43	12	18	30	12	70	102	2 1/4:1	2 PC.
71	47	12	18	33	12	77	114	2 1/4:1	3 PC.
77	52	12	18	36	12	77	126	2:1	3 PC.
83	57	12	18	39	12	77	138	2:1	3 PC.

* THE CONTRACTOR SHALL VERIFY WITH PROVIDERS FOR CURRENT INDUSTRY SIZES.

NOTE:

1. ALL 3 PIECE BODIES TO HAVE 12 GAUGE THICK SIDES AND 10 GAUGE THICK CENTER PANELS. WIDTH OF CENTER PANELS TO BE GREATER THAN 20% OF THE PIPE PERIPHERY. MULTIPLE PANEL BODIES TO HAVE LAP SEAMS WHICH ARE TO BE TIGHTLY JOINED BY 3/8" GALVANIZED RIVETS OR BOLTS.
2. △1 FOR 77" X 52" AND 83" X 57" SIZES, REINFORCED EDGED TO BE SUPPLEMENTED BY L 2" X 2" X 1/4" GALVANIZED ANGLES. THE ANGLES TO BE ATTACHED BY 3/8" GALVANIZED NUTS AND BOLTS.
3. ANGLE REINFORCEMENT WILL BE PLACED UNDER THE CENTER PANEL SEAMS ON THE 77" X 52" AND 83" X 57" SIZES.
4. * TOE PLATE TO BE CONSTRUCTED WHERE SHOWN ON PLANS.

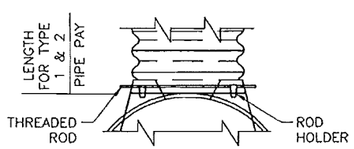

TYPE 2

FOR 17" x 13" THRU 57" x 38"

STANDARD CONNECTION
STANDARD END SECTIONS FOR PIPE-ARCH STEEL PIPE

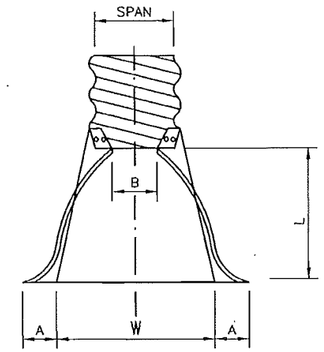

PLAN

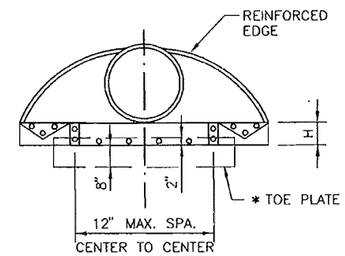

ELEVATION

ROUND PIPE DIMENSIONS	GALVANIZED THICKNESS GAUGE.	DIMENSIONS					APPROX. SLOPE	BODY
PIPE DIA. (IN.)		A (IN.) (± 1")	B (IN.) (MAX.)	H (IN.) (± 1")	L (IN.) (± 1½")	W (IN.) (± 2")		
12	16	6	6	6	21	24	2 1/2:1	1 PC.
15	16	7	8	6	26	30	2 1/2:1	1 PC.
18	16	8	10	6	31	36	2 1/2:1	1 PC.
21	16	9	12	6	36	42	2 1/2:1	1 PC.
24	16	10	13	6	41	48	2 1/2:1	1 PC.
30	14	12	16	8	51	60	2 1/2:1	1 PC.
36	14	14	19	9	60	72	2 1/2:1	2 PC.
42	12	16	22	11	69	84	2 1/2:1	2 PC.
48	12	18	27	12	78	90	2 1/4:1	2 PC.
54	12	18	30	12	84	102	2:1	2 PC.
60	12	18	33	12	87	114	1 3/4:1	3 PC.
66	12	18	36	12	87	120	1 1/2:1	3 PC.
72	12	18	39	12	87	126	1 1/3:1	3 PC.
78	12	18	42	12	87	132	1 1/4:1	3 PC.
84	12	18	45	12	87	138	1 1/16:1	3 PC.

* THE CONTRACTOR SHALL VERIFY WITH PROVIDERS FOR CURRENT INDUSTRY SIZES.

NOTE:

1. ALL 3 PIECE BODIES TO HAVE 12 GAUGE THICK SIDES AND 10 GAUGE CENTER PANELS. WIDTH OF CENTER PANELS TO BE GREATER THAN 20% OF THE PIPE PERIPHERY. MULTIPLE PANEL BODIES TO HAVE LAP SEAMS WHICH ARE TO BE TIGHTLY JOINED BY 3/8" ø GALVANIZED RIVETS OR BOLTS. △3
2. FOR 60" THRU 84" SIZES, REINFORCED EDGES TO BE SUPPLEMENTED WITH GALVANIZED STIFFENER ANGLES. THE ANGLES WILL BE L 2" X 2" X 1/4" FOR 60" THRU 78" DIAMETER AND L 2 1/2" X 2 1/2" X 1/4" FOR 78" AND 84" DIAMETER. THE ANGLES TO BE ATTACHED BY 3/8" GALVANIZED NUTS AND BOLTS.
3. * TOE PLATE TO BE CONSTRUCTED WHERE SHOWN ON PLANS.

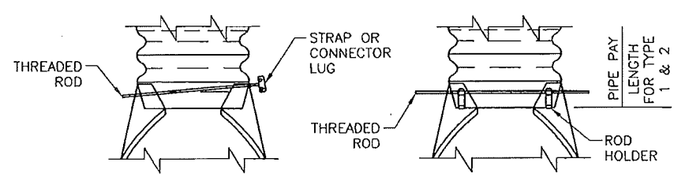

TYPE 1

FOR 12" THRU 24" ONLY

TYPE 2

FOR 30" THRU 84" ONLY

STANDARD CONNECTIONS
STANDARD END SECTIONS FOR ROUND STEEL PIPE

GENERAL NOTES

1. FOR MULTIPLE INSTALLATION OF ALL TYPES, A MIN. OF A 2'-0" SPACING MEASURED ALONG THE HORIZONTAL BETWEEN FLARED END SECTIONS AT THEIR WIDEST CROSS SECTION SHALL BE USED.
2. WELDING WILL NOT BE PERMITTED IN CONNECTING END SECTIONS TO CONNECTOR SECTIONS OR CONNECTOR SECTIONS TO PIPE.
3. TYPE 1 AND TYPE 2 MAY BE USED WITH WELDED SEAM OR LOCKSEAM CONNECTIONS HELICALLY CORRUGATED PIPE WITH REROLLED ENDS. REROLLED ENDS SHALL INCLUDE A MINIMUM OF TWO ANNULAR CORRUGATIONS OF THE SAME SIZE AS THE PIPE CORRUGATIONS.

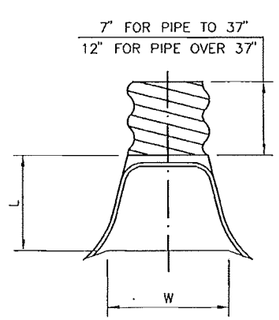

PLAN

PIPE DIAM. (IN.)	APRONS	
	L (IN.)	W (IN.)
18	19	30
21	23	36
24	28	42
30	31.5	48
36	38.5	60
42	47	75
48	54	85
60	63	96
66	70	112
72	77	128

CORRUGATED ALUMINUM PIPE END SECTION

NO.	DATE	REV.BY	DESCRIPTION
△3	2/10/09	YML	CORRECTED 0.6 GA. TO 3/8" ø
△2	2/10/09	YML	MADE GENERAL REVISIONS
△1	2/10/09	YML	CORRECTED 83" x 35" TO 83" x 57"

REVISIONS (OR CHANGE NOTICES)

NEW MEXICO
DEPARTMENT OF TRANSPORTATION
STANDARD DRAWING

CULVERT PIPE
END SECTIONS
(METAL)

DESIGNED BY_____ DRAWN BY SKL CHECKED BY TM/YML

570-02-1/2 1 of 2

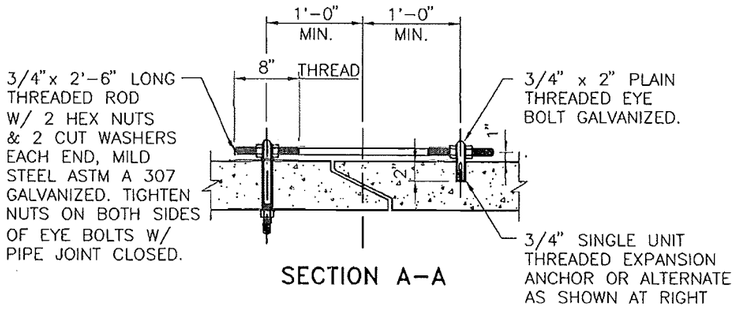

SECTION A–A

TYPE "A"

NOTE: 1. FASTENERS SHALL BE USED ONLY WHERE CALLED FOR IN THE CONTRACT.

2. TYPE A, TYPE B, OR APPROVED EQUAL MAY BE USED FOR PIPE DIAMETERS OF 24" THRU 84".

3. COST OF FASTENERS TO BE CONSIDERED INCIDENTAL TO COMPLETION OF CONSTRUCTION AND NO DIRECT PAYMENT SHALL BE MADE THEREFORE.

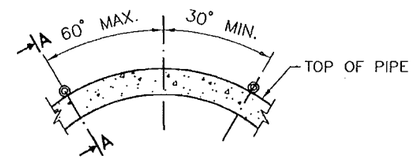

LOCATION OF EYE BOLTS

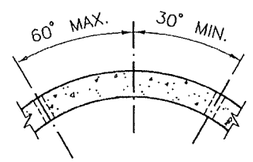

LOCATION OF 1" HOLES

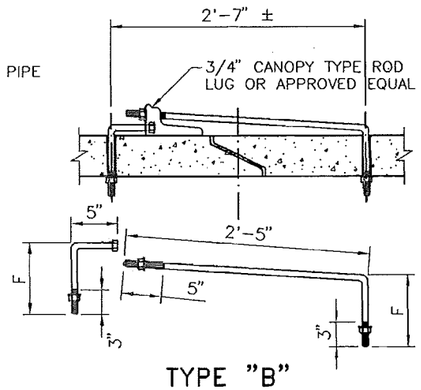

TYPE "B"

NOTE: ¾" GALVANIZED ANCHOR BOLTS, NUTS AND WASHERS, MILD STEEL ASTM A 307 ROD LUG SHALL BE COATED WITH COAL TAR EPOXY OR APPROVED EQUAL.

DETAIL OF FASTENER FOR END SECTION FOR CONCRETE PIPE

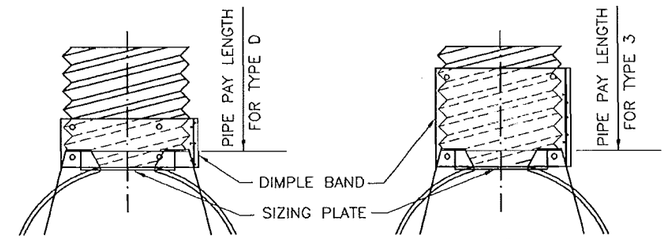

TYPE D

FOR 12" THRU 36" AND FOR 17" x 13" THRU 57" x 38" ONLY.

TYPE 3

FOR 42" THRU 84" AND FOR 64" x 43" THRU 83" x 57" ONLY.

NOTE: FOR TYPE D AND TYPE 3, THE DIMPLE BAND OR CORRUGATED PIPE CONNECTOR SECTION SHALL BE ATTACHED TO THE END SECTION BY 3/8" GALVANIZED STEEL RIVETS OR BOLTS SPACED AT APPROXIMATELY 6" CENTERS. FOR TYPE 3 THE CONNECTION INCLUDES 1' OF THE PIPE LENGTH AS A CONNECTOR SECTION FOR PIPE ARCH SIZES 64" x 43" THRU 83" x 57" AND ROUND PIPE SIZES 42" THRU 84" DIAMETER. THICKNESS OF CONNECTOR SECTION SHALL BE THE SAME AS THE END SECTIONS AS TABULATED IN 570-02-1/2.

STANDARD CONNECTIONS FOR HELICALLY CORRUGATED PIPE

PIPE DIAM.	F
24" – 36"	5"
36" – 42"	6"
48" – 60"	7"
72" – 84"	9"

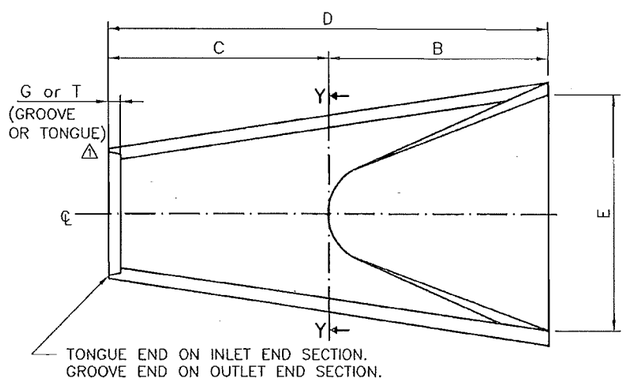

PLAN VIEW

	DIAM. (IN.)	WALL (IN.)	G or T (IN.)	WEIGHT (LBS.)	SLOPE	A (FT.-IN.)	B (FT.-IN.)	C (FT.-IN.)	D (FT.-IN.)	E (FT.-IN.)	DIAM. + 1" (IN.)
	12	2	1 1/2	530	3:1	0-4	2-0	4-0 7/8	6-0 7/8	2-0	13
	15	2 1/4	2	740	3:1	0-6	2-3	3-10	6-1	2-6	16
	18	2 1/2	2 1/2	990	3:1	0-9	2-3	3-10	6-1	3-0	19
2	21	2 3/4	2 1/2	1280	3:1	0-9	2-11	3-2	6-1	3-6	22
	24	3	2 1/2	1520	3:1	0-9 1/2	3-7 1/2	2-6	6-1 1/2	4-0	25
	27	3 1/4	2 1/2	1930	3:1	0-10 1/2	4-0	2-1 1/2	6-1 1/2	4-6	28
	30	3 1/2	3	2190	3:1	1-0	4-6	1-7 3/4	6-1 3/4	5-0	31
	33	3 3/4	3 3/8	3150	3:1	1-1 1/2	4-10 1/2	3-3 1/4	8-1 3/4	5-6	34
	36	4	3 1/2	4100	3:1	1-3	5-3	2-10 3/4	8-1 3/4	6-0	37
	42	4 1/2	3 3/4	5380	3:1	1-9	5-3	2-11	8-2	6-6	43
	48	5	4 1/4	6550	3:1	2-0	6-0	2-2	8-2	7-0	49
2	54	5 1/2	4 3/4	8040	2:1	2-3	5-5	2-11	8-4	7-6	55
	60	6	5	8750	2:1	2-6	5-0	3-3	8-3	8-0	61
	66	6 1/2	5 1/2	10630	2:1	2-8	6-6	1-9	8-3	8-6	67
	72	7	6	12520	2:1	2-10	6-6	1-9	8-3	9-0	73
	78	7 1/2	6 1/2	14430	2:1	3-1	6-6	1-9	8-3	9-6	79
	84	8	7	16350	2:1	3-5	6-6	1-9	8-3	10-0	85

NOTES: DESIGN OF END SECTION SHALL CONFORM TO STANDARD REINFORCED CONCRETE CULVERT PIPE.

NOTE:
FOR GENERAL NOTES, STANDARD PIPE ARCH END SECTIONS, STANDARD ROUND END SECTIONS AND CORRUGATED ALUMINUM PIPE END SECTIONS NOT SHOWN ON THIS SHEET, REFER TO 570-02-1/2.

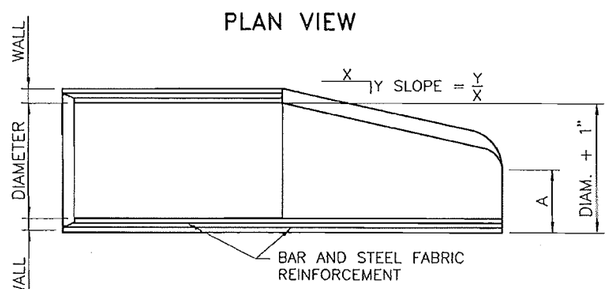

LONGITUDINAL SECTION

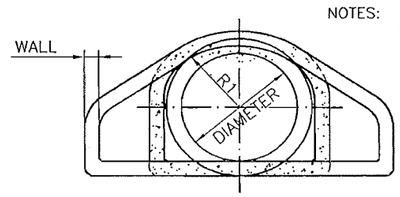

END VIEW Y–Y SECTION

FLARED END SECTIONS FOR REINFORCED CONCRETE CULVERT PIPE

NO.	DATE	REV.BY	DESCRIPTION
3	2/10/09	YML	CORRECTED "SLOPE" FROM 24:1 TO 2:1
2	2/10-09	YML	CORRECTED "G or T" FROM 2 1/4" TO 2 1/2"
1	2/10/09	YML	ADDED DEFINITION FOR "G or T"

REVISIONS (OR CHANGE NOTICES)

NEW MEXICO
DEPARTMENT OF TRANSPORTATION
STANDARD DRAWING

CULVERT PIPE
END SECTIONS
(CONCRETE)

DESIGNED BY ____ DRAWN BY SKL CHECKED BY TM/YML

570-02-2/2 2 of 2

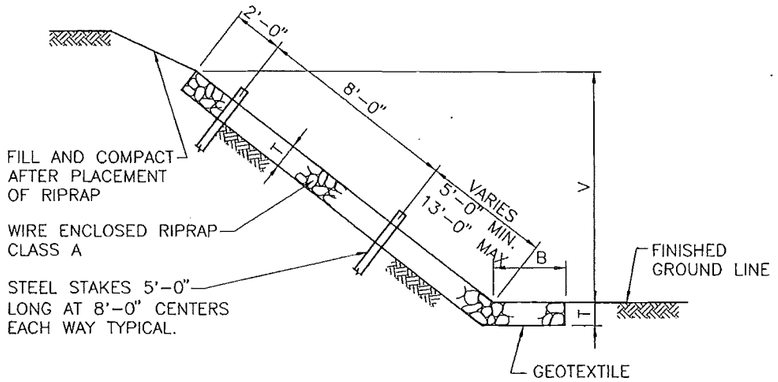

SECTION TYPE I

QUANTITIES PER LINEAR FOOT	
SLOPE	RIPRAP (CU. YDS.)
1.5 : 1	$\frac{T}{27}(B + 1.803\ V + 0.303\ T)$
1.75 : 1	$\frac{T}{27}(B + 2.016\ V + 0.266\ T)$
2 : 1	$\frac{T}{27}(B + 2.236\ V + 0.236\ T)$
3 : 1	$\frac{T}{27}(B + 3.162\ V + 0.162\ T)$
4 : 1	$\frac{T}{27}(B + 4.123\ V + 0.123\ T)$

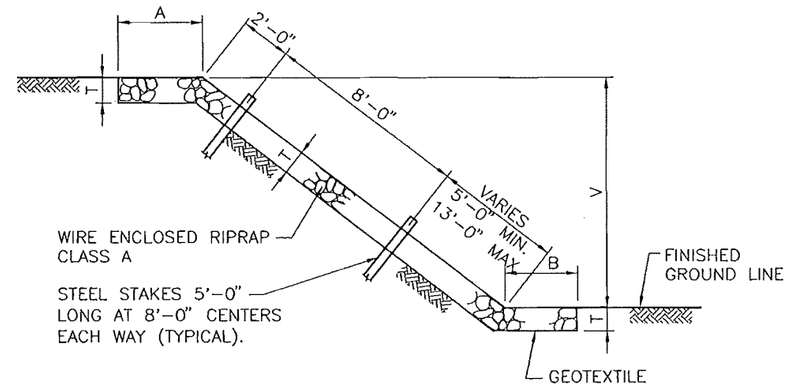

SECTION TYPE II

QUANTITIES PER LINEAR FOOT	
SLOPE	RIPRAP (CU. YDS.)
1 : 1	$\frac{T}{27}(A + B + 1.414V)$
1.5 : 1	$\frac{T}{27}(A + B + 1.803V)$
1.75 : 1	$\frac{T}{27}(A + B + 2.016V)$
2 : 1	$\frac{T}{27}(A + B + 2.236V)$
3 : 1	$\frac{T}{27}(A + B + 3.162V)$
4 : 1	$\frac{T}{27}(A + B + 4.123V)$

GENERAL NOTES

1. WIRE FABRIC FOR RIP RAP SHALL BE "W" OR HEXAGONAL MESH AND MEET THE REQUIREMENTS LISTED IN SECTION 602 OF THE NMDOT STANDARD SPECIFICATIONS FOR HIGHWAY AND BRIDGE CONSTRUCTON, CURRENT EDITION.
2. STEEL STAKES MAY BE RAILROAD RAILS WEIGHING NOT LESS THAN 30 LBS. PER YARD, 4" NOMINAL DIAMETER STANDARD STRENGTH GALVANIZED STEEL PIPE, OR L 4" x 4"x 3/8" STEEL ANGLES. STEEL STAKES SHALL PROJECT 6" ABOVE TOP OF RIPRAP. STEEL STAKES ARE CONSIDERED INCIDENTAL TO THE COMPLETION OF THE WORK AND NO DIRECT MEASUREMENT OR PAYMENT WILL BE MADE THEREFORE.
3. IF LENGTH OF SLOPE IS 15 FEET OR LESS, ONLY ONE ROW OF STEEL STAKES 2 FEET FROM THE TOP EDGE OF RIPRAP WILL BE REQUIRED UNLESS OTHERWISE NOTED ON PLANS.
4. FOR DIMENSIONS A, B, V, & T. SEE BRIDGE OR ROADWAY PLANS.
5. T=12" UNLESS OTHERWISE SHOWN ON PLANS; T=18" AT BRIDGES.
6. FASTENERS FOR SPLICES AND/OR SELVEDGE END CONNECTORS MAY BE WIRE TIES, INTERLOCKING WIRE CLIPS, HOG RINGS, OR LACING WIRE. ONLY FASTENERS WHICH APPEAR ON THE DEPARTMENT'S "APPROVED PRODUCTS LIST" MAY BE USED.
7. LACING SHALL BE CONTINUOUS AS FAR AS IS PRACTICAL AND SHALL PASS THROUGH EACH MESH OPENING.
8. WHERE SPLICING IS NECESSARY, AN OVERLAP OF LACING OF AT LEAST 1 FOOT SHALL BE PROVIDED.

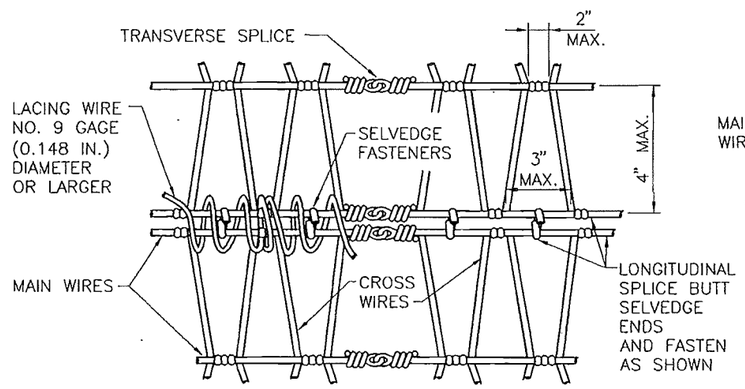

NORMAL INTERSECTION SPLICES

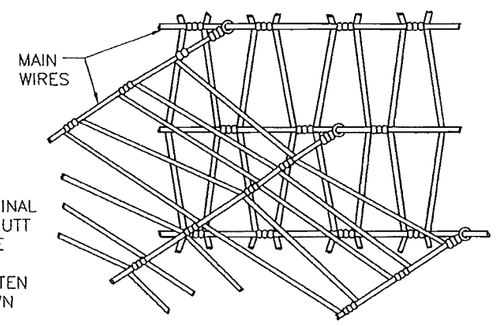

SKEWED INTERSECTION SPLICE

"W" MESH

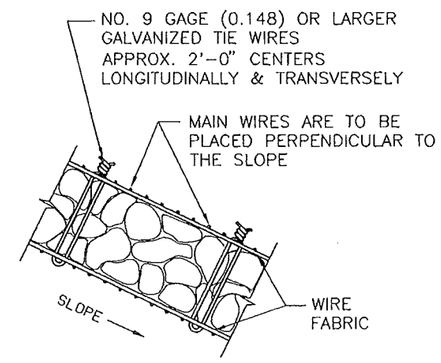

TYPICAL SECTION

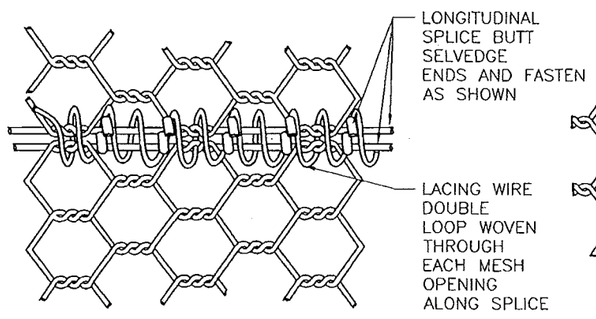

NORMAL INTERSECTION SPLICE

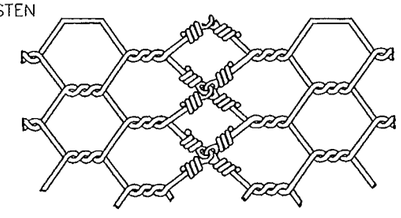

TRANSVERSE SPLICE

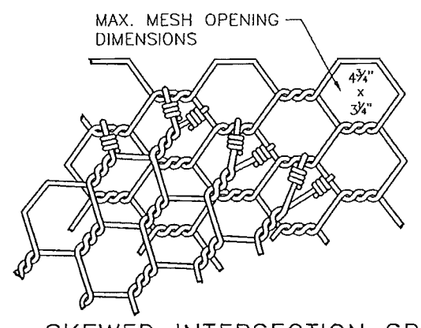

SKEWED INTERSECTION SPLICE

HEXAGONAL MESH

NO.	DATE	REV.BY	DESCRIPTION

REVISIONS (OR CHANGE NOTICES)

NEW MEXICO
DEPARTMENT OF TRANSPORTATION
STANDARD DRAWING

WIRE ENCLOSE RIPRAP
CLASS "A"

DESIGNED BY____ DRAWN BY SKL CHECKED BY YML

602-01-1/1 1 of 1

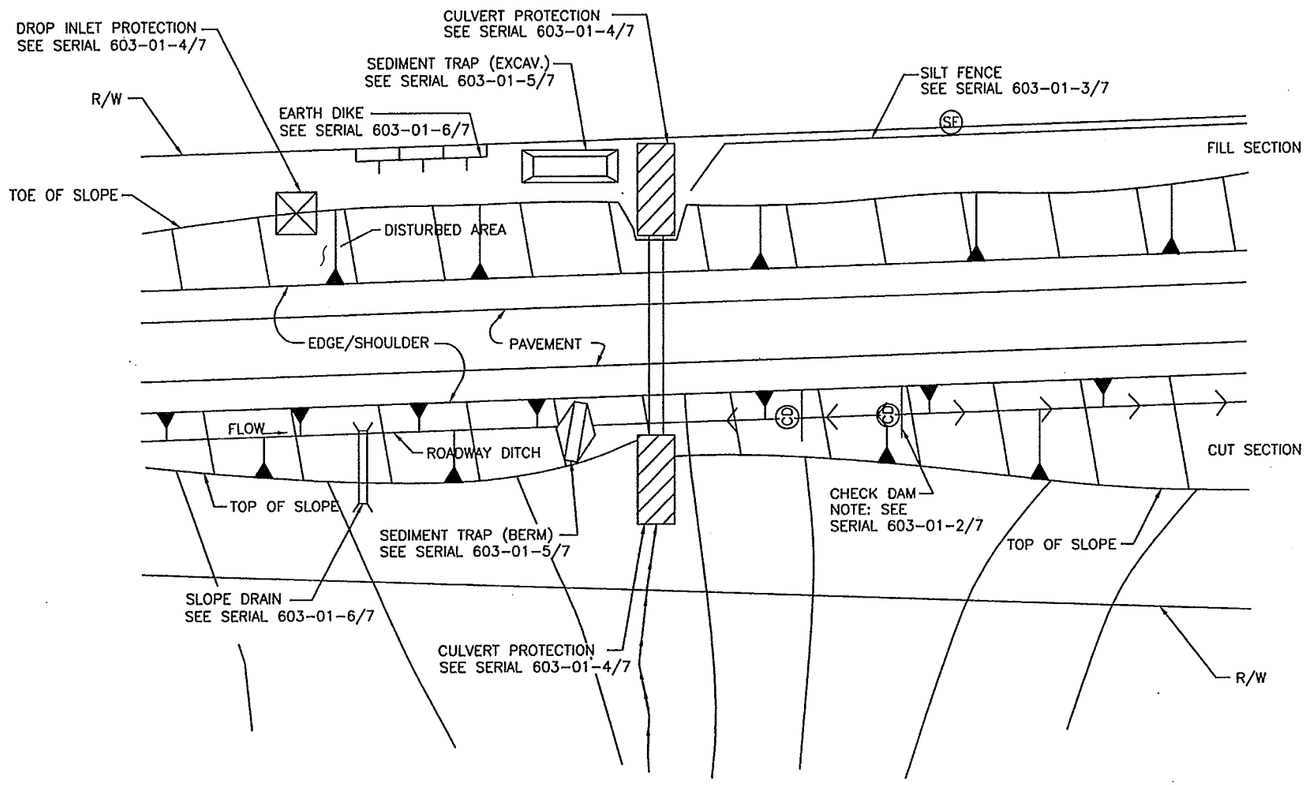

TYPICAL USAGE OF SELECTED EROSION
AND SEDIMENT CONTROL MEASURES

STANDARD SYMBOLS FOR EROSION
AND SEDIMENT CONTROL MEASURES

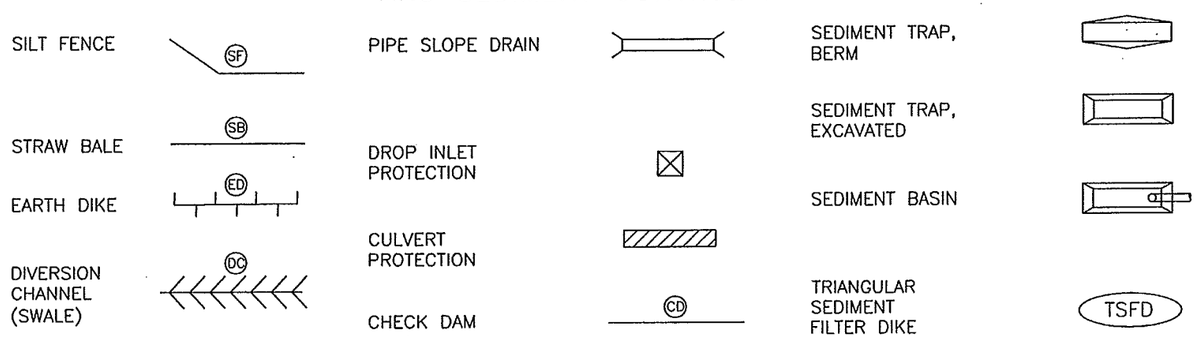

TEMPORARY EROSION & SEDIMENT CONTROL MEASURES (T.E.S.C.M.)

GENERAL NOTES

1. THE SOIL RETENTION BLANKET INSTALLATION DETAILS SHOWN FOR CULVERT PROTECTION SHALL BE USED FOR ALL TEMPORARY EROSION AND SEDIMENT CONTROL MEASURES UTILIZING SOIL RETENTION BLANKETS UNLESS OTHERWISE NOTED.
2. ROCK PLATING USED IN THE TEMPORARY EROSION AND SEDIMENT CONTROL MEASURES SHOWN ON THESE SHEETS SHALL HAVE A MINIMUM THICKNESS OF 6 INCHES UNLESS OTHERWISE INDICATED.
3. ALL TEMPORARY EROSION AND SEDIMENT CONTROL MEASURES PLACED WITHIN THE CONSTRUCTION CLEAR ZONE SHALL BE INSTALLED WITH 8:1 SLOPES PARALLEL TO TRAFFIC AND 4:1 SLOPES PERPENDICULAR TO TRAFFIC.
4. SEDIMENT TRAPS SHALL BE CLEANED OF ACCUMULATED SEDIMENT WHEN APPROXIMATELY 50% FILLED.
5. CHECK DAMS SHALL BE CLEANED OF ACCUMULATED SEDIMENT WHEN THE DEPOSITS REACH APPROXIMATELY ONE-HALF THE HEIGHT OF THE CHECK DAM.
6. CULVERT PROTECTIONS SHALL BE INSTALLED UPON INITIATION OF EARTH WORK ACTIVITIES AND MAINTAINED AS MUCH AS PRACTICAL UNTIL STABILIZATION IS COMPLETED AND ACCEPTED. CULVERT PROTECTIONS MAY BE REMOVED FOR PERIODS OF TIME AS REQUIRED DURING CONSTRUCTION TO COMPLETE ADJACENT IMPROVEMENTS.
7. THE CONTRACTOR MAY CONSTRUCT AN EARTH DIKE AS SHOWN, OR RELOCATE THE CHECK DAMS AS CONSTRUCTION PROGRESSES. NO DIRECT PAYMENT SHALL BE MADE FOR RELOCATION OF THE CHECK DAMS.
8. STRAW BALES ARE NOT INTENDED FOR USE ON NEW MEXICO DEPARTMENT OF TRANSPORTATION PROJECTS.

NO.	DATE	REV. BY	DESCRIPTION

REVISIONS (OR CHANGE NOTICES)

NEW MEXICO DEPARTMENT OF TRANSPORTATION STANDARD DRAWING

TEMPORARY EROSION & SEDIMENT CONTROL MEASURES

APPROVED Raymond A. VanHoven 11/29/07
DESIGN ENGINEER DATE

DESIGNED BY___ DRAWN BY ___ CHECKED BY ___

603-01-1/7 SERIAL 1 OF 7

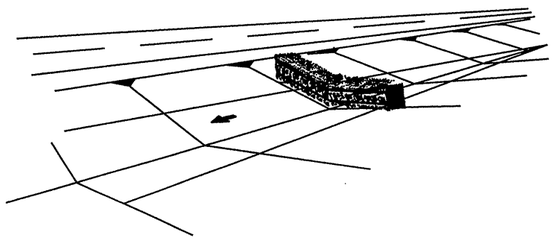

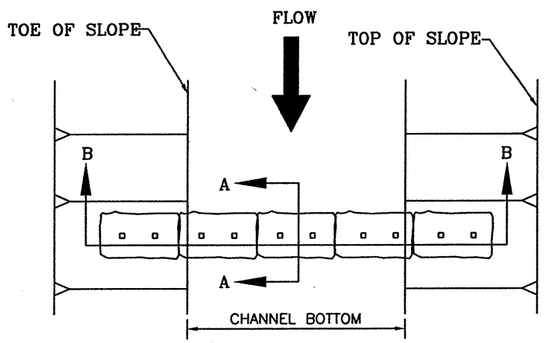

PLAN

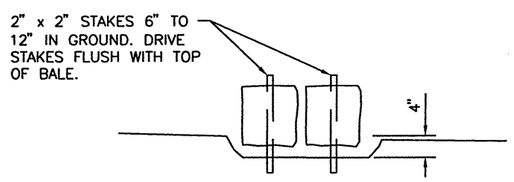

SECTION A–A

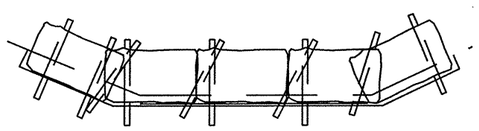

SECTION B–B

TYPE III
(STRAW BALE)

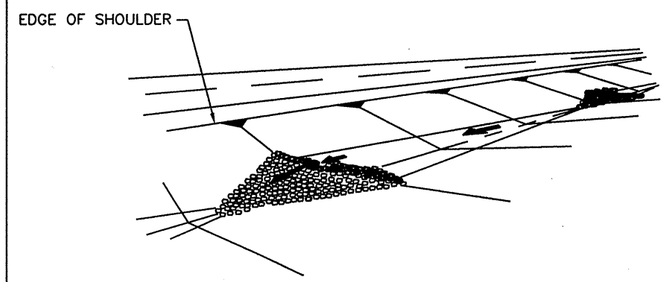

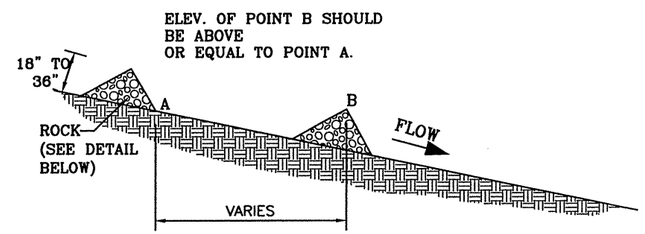

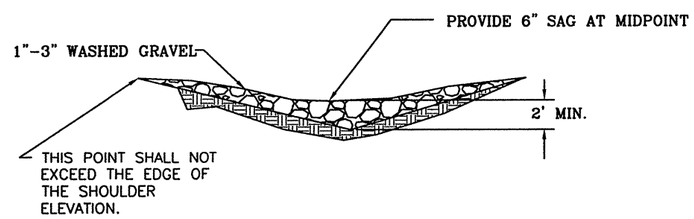

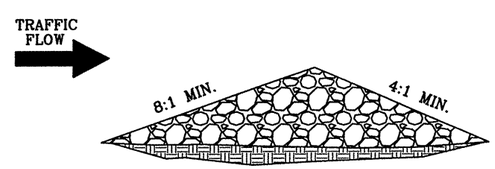

TYPE II
STONE DAM

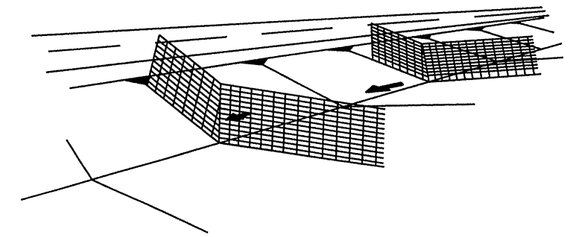

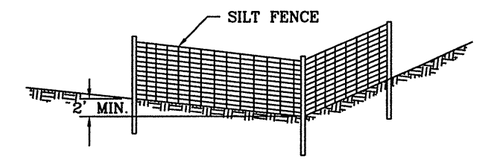

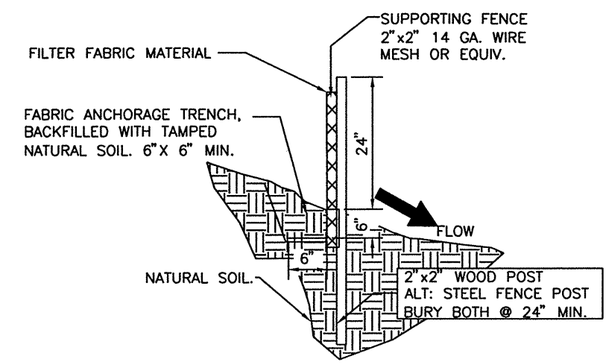

TYPE I SILT FENCE

NO.	DATE	REV. BY	DESCRIPTION

REVISIONS (OR CHANGE NOTICES)

NEW MEXICO
DEPARTMENT OF TRANSPORTATION
STANDARD DRAWING

TEMPORARY EROSION & SEDIMENT CONTROL MEASURES
CHECK DAMS

APPROVED Raymunda VanHoven 11/29/04
DESIGN ENGINEER DATE

DESIGNED BY___ DRAWN BY ___ CHECKED BY ___

603–01–2/7 SHEET 2 OF 7

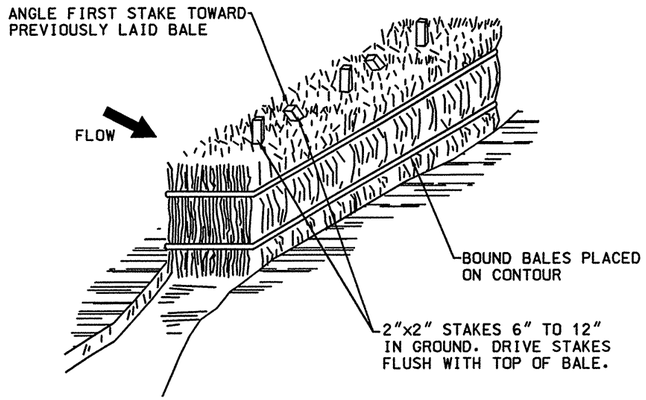

TYPE II
STRAW BALE OPTION

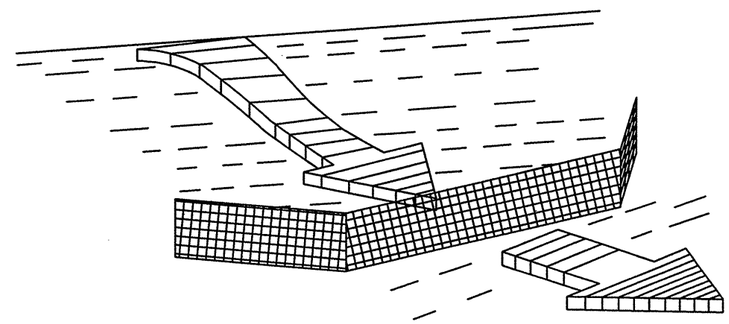

TYPE I
SILT FENCE

NOTES: SILT FENCE AND CHECK DAM

THE CONTRACTOR SHALL BE RESPONSIBLE FOR DETERMINING THE POST SPACING FOR SILT FENCES TO MINIMIZE MAINTENANCE.

1. POST SPACING SHALL BE 4 FT. MAXIMUM WITHOUT SUPPORTING FENCE, 10 FT. MAXIMUM WITH SUPPORTING FENCE.
2. POSTS FOR 4 FT. MAXIMUM POST SPACING SHALL BE 2 INCH SQUARE NOMINAL SIZE OR HEAVIER WOOD POSTS, OR STANDARD "T" OR "U" SECTION STEEL POSTS WEIGHING NOT LESS THAN 2 LBS. PER. LINEAR FOOT.

   POSTS FOR 10 FT. MAXIMUM POST SPACING SHALL BE 4 INCH SQUARE NOMINAL SIZE OR HEAVIER WOOD POSTS, OR STEEL POSTS AS SPECIFIED ABOVE.
3. SUPPORTING FENCE SHALL BE WIRE MESH (14 GA. MIN., 1 INCH MAX. MESH OPENINGS), SNOW FENCE, PLASTIC FENCE OR APPROVED.
4. SUPPORTING FENCE SHALL BE FASTENED SECURELY TO POSTS WITH STAPLES OR WIRE TIES. GEOTEXTILE FABRIC SHALL BE FASTENED SECURELY TO SUPPORTING FENCE WITH WIRE TIES SPACED AT 2 FT. CENTERS ALONG THE TOP AND MID-SECTION. WHEN A SUPPORTING FENCE IS NOT USED, GEOTEXTILE FABRIC SHALL BE SECURELY FASTENED TO POSTS WITH STAPLES OR WIRE TIES.
5. WHEN SILT FENCE IS USED FOR CHECK DAMS INSTALLED IN DITCHES, A SUPPORTING FENCE SHALL BE PROVIDED, WITH MAXIMUM POST SPACING OF 10 FT.
6. STANDARD "T" OR "U" SECTION STEEL POSTS SHALL NOT BE USED WITHIN THE CONSTRUCTION CLEAR ZONE RECOVERY AREA.
7. STRAW BALES ARE NOT INTENDED FOR USE ON NEW MEXICO DEPARTMENT OF TRANSPORTATION PROJECTS.

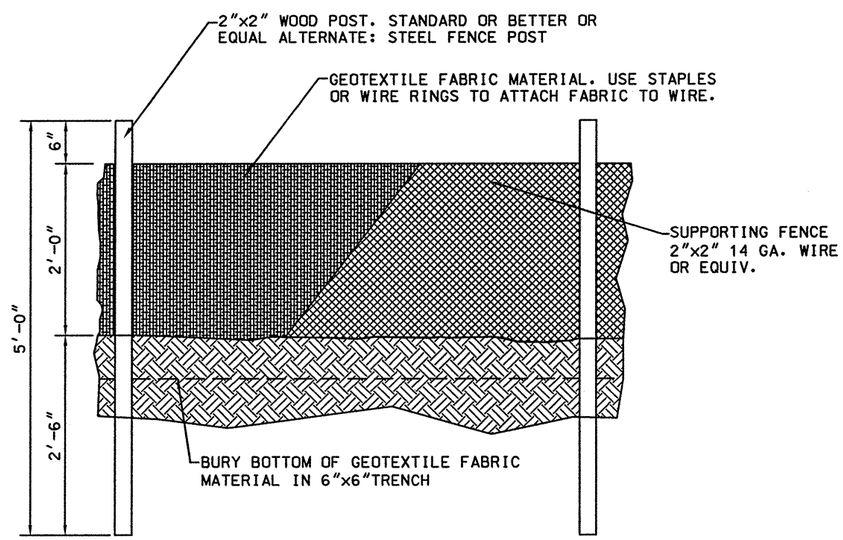

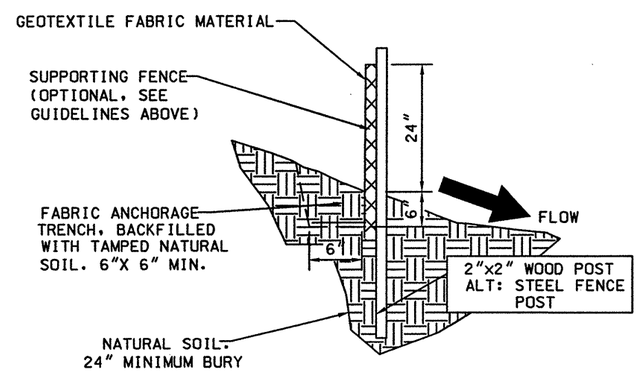

NO.	DATE	REV. BY	DESCRIPTION

REVISIONS (OR CHANGE NOTICES)

NEW MEXICO DEPARTMENT OF TRANSPORTATION STANDARD DRAWING

TEMPORARY EROSION & SEDIMENT CONTROL MEASURES SILT FENCE

APPROVED Raymunda Von Hoven 11/29/09
DESIGN ENGINEER DATE

DESIGNED BY___ DRAWN BY___ CHECKED BY___

603-01-3/7

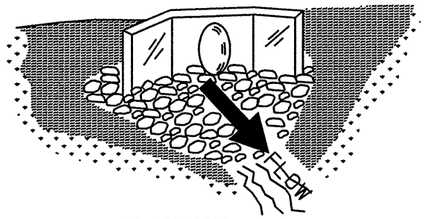

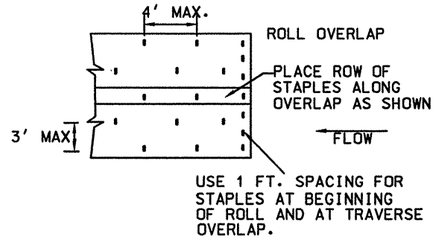

SOIL RETENTION BLANKET
STAPLE PATTERN

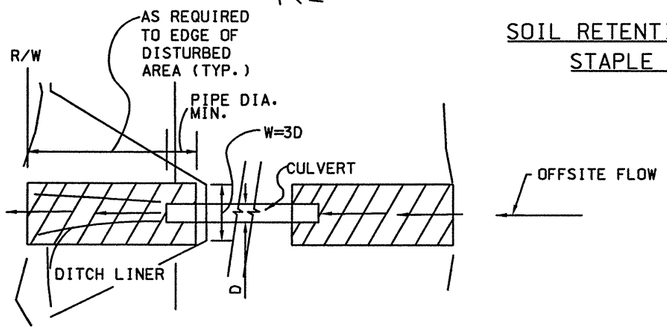

TYPICAL DITCH LINER
INSTALLATIONS AT CULVERTS

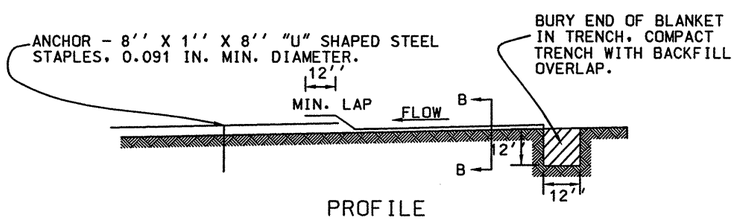

PROFILE
DITCH LINER

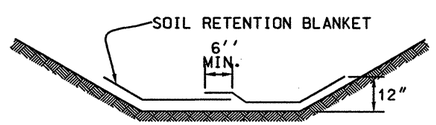

SECTION B-B

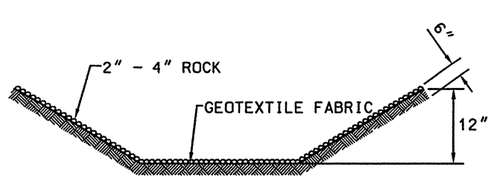

SECTION B-B

NOTES: CULVERT PROTECTION

1. WHEN CULVERT PROTECTION IS SPECIFIED, EITHER SOIL RETENTION BLANKETS OR SOIL RETENTION ROCK MAY BE PROVIDED.
2. THE CULVERT PROTECTION WIDTH REQUIRED SHALL BE IN ACCORDANCE WITH THESE DETAILS UNLESS SPECIFIED OTHERWISE.
3. THE SOIL RETENTION BLANKET INSTALLATION SHOWN OUTLINES MINIMUM REQUIREMENTS. MANUFACTURER'S RECOMMENDATIONS SHALL BE USED IF THEY ARE MORE STRINGENT.

CULVERT PROTECTION

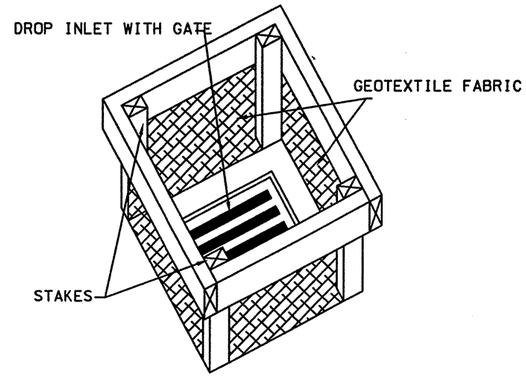

TYPE I

NOTE: WHEN SPECIFIED, ROCKS OR STRAW BALES CAN BE SUBSTITUTED FOR SILT FENCE.

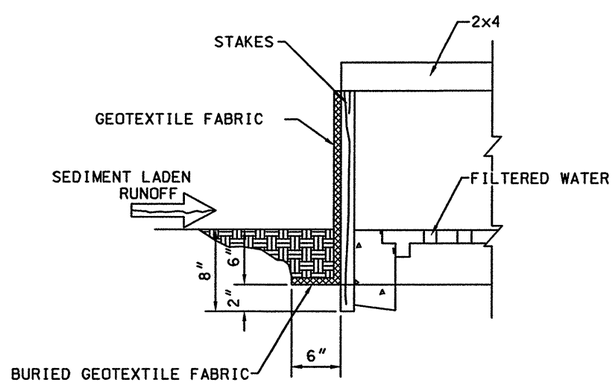

DROP INLET PROTECTION

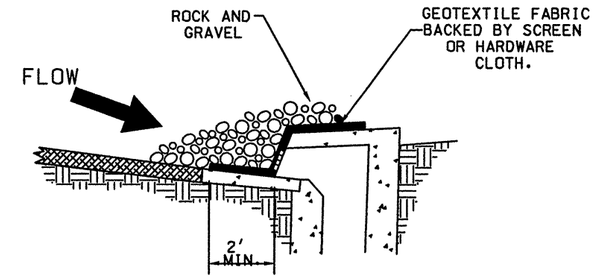

TYPE I
CURB OPENING

NOTES: GRAVEL INLET PROTECTION

1. THIS INSTALLATION IS FOR A TYPE I CURB DROP INLET ONLY. THE TYPE II, III TO "N" INSTALLATION IS SIMILAR.
2. THE SPACING OF THE LONGITUDINAL BRACING SHALL NOT EXCEED 5 FT.

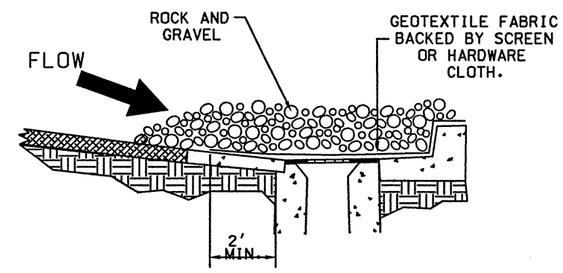

TYPE II
CURB DROP INLET

NO.	DATE	REV. BY	DESCRIPTION

REVISIONS (OR CHANGE NOTICES)

NEW MEXICO
DEPARTMENT OF TRANSPORTATION
STANDARD DRAWING

TEMPORARY EROSION & SEDIMENT CONTROL MEASURES
CULVERT & DROP INLET PROTECTION

APPROVED Raymunda Van Hoven 11/29/09
DESIGN ENGINEER DATE

DESIGNED BY___ DRAWN BY___ CHECKED BY___

603-01-4/7

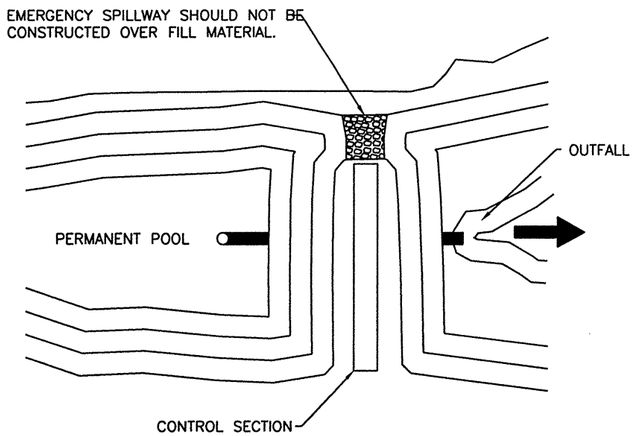

PLAN VIEW

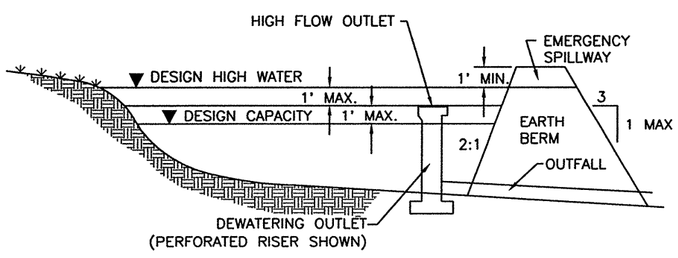

CROSS SECTION

SEDIMENT BASIN

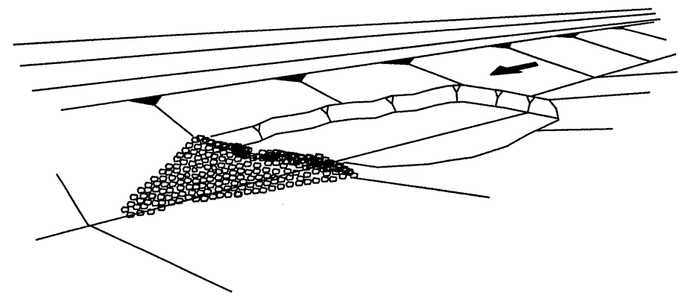

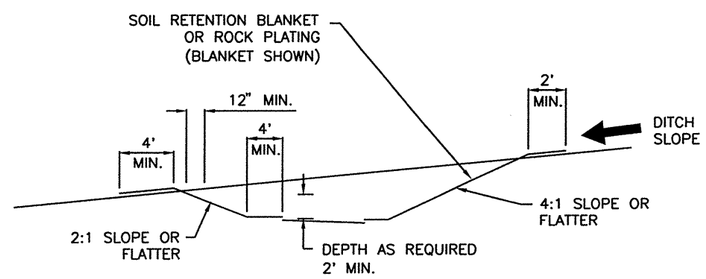

SEDIMENT BASIN, EXCAVATED

NOTES: SEDIMENT TRAP

1. TEMPORARY SEDIMENT TRAPS MAY BE CONSTRUCTED BY EXCAVATION ALONE OR BY EXCAVATION IN COMBINATION WITH AN EMBANKMENT.
2. TEMPORARY SEDIMENT TRAPS ARE OFTEN USED IN CONJUNCTION WITH A DIVERSION DIKE OR SWELL.
3. THE DRAINAGE AREA FOR THE SEDIMENT TRAP SHOULD NOT EXCEED 5 DISTURBED ACRES.
4. THE TRAP MUST BE ACCESSIBLE FOR EASE OF REGULAR MAINTENANCE, WHICH IS CRITICAL TO ITS PROPER FUNCTIONING.
5. SEDIMENT TRAPS ARE TEMPORARY MEASURES AND SHOULD NOT REMAIN IN PLACE LONGER THAN 18 TO 24 MONTHS.
6. THE EMBANKMENT MAY NOT EXCEED 5 FT. IN HEIGHT.
7. THE RECOMMENDED MINIMUM WIDTH AT THE TOP OF THE EMBANKMENT IS BETWEEN 2 FT. AND 5 FT.

SEDIMENT TRAP

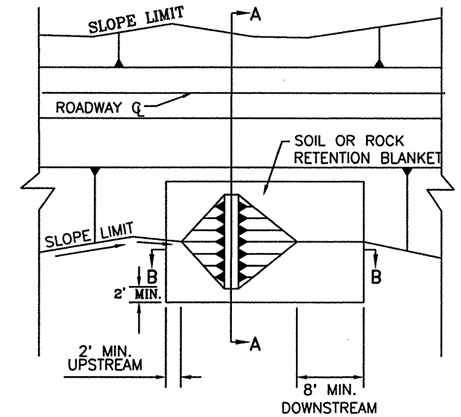

PLAN

SECTION A–A

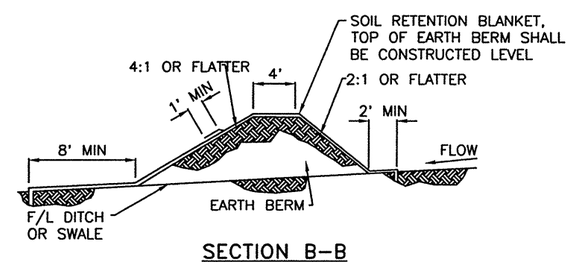

SECTION B–B

EARTH DIKE (BERM)

NO.	DATE	REV. BY	DESCRIPTION

REVISIONS (OR CHANGE NOTICES)

NEW MEXICO DEPARTMENT OF TRANSPORTATION STANDARD DRAWING

T.E.S.C.M.
SEDIMENT BASIN, SEDIMENT TRAP & EARTH DIKE

APPROVED Raymunda VanHoven 11/29/09
DESIGN ENGINEER DATE

DESIGNED BY___ DRAWN BY ___ CHECKED BY ___

603-01-5/7 SHEET 5 OF 7

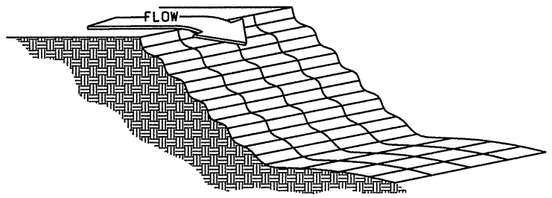

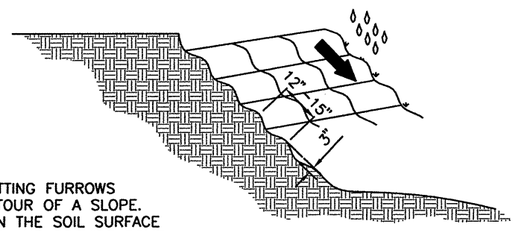

GROOVING IS CUTTING FURROWS ALONG THE CONTOUR OF A SLOPE. IRREGULARITIES IN THE SOIL SURFACE CATCH RAINWATER AND PROVIDE SOME RETENTION OF LIME, FERTILIZER AND SEED.

GROOVING SLOPES

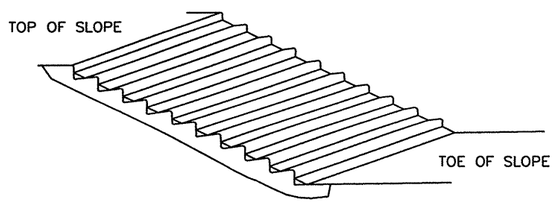

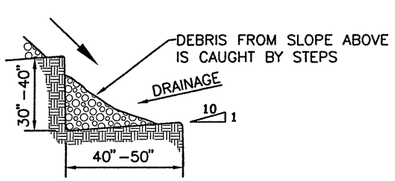

STAIR STEPPING CUT SLOPE

SURFACE ROUGHENING

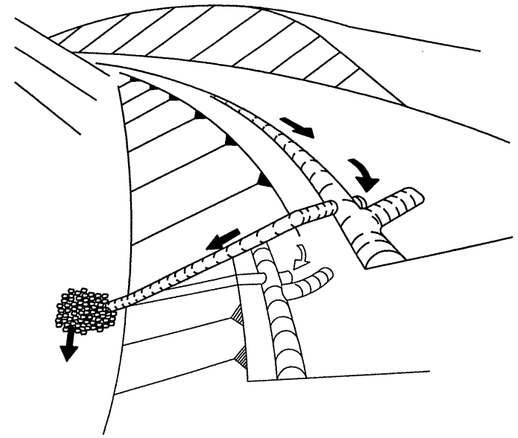

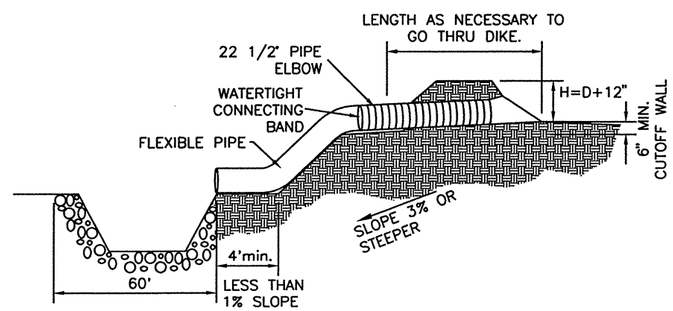

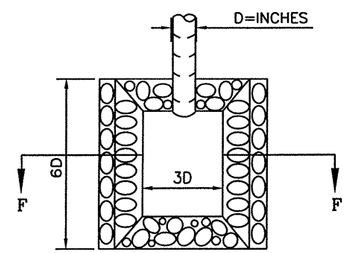

RIPRAP APRON PLAN

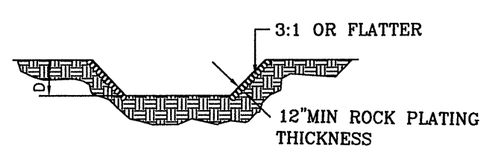

SECTION F-F

SLOPE DRAIN

NOTES: PIPE SLOPE DRAIN

1. THE FLEXIBLE PIPE SHALL BE THE SAME DIAMETER AS THE INLET PIPE AND SHALL BE CONSTRUCTED OF A DURABLE MATERIAL WITH HOLD-DOWN GROMMETS SPACED AT 10 FT. ON CENTER.
2. THE FLEXIBLE PIPE SHALL BE SECURELY FASTENED TO THE CORRUGATED METAL OR HIGH DENSITY POLYETHYLENE PIPE WITH METAL STRAPPING OR WATERTIGHT CONNECTING COLLARS.
3. THE FLEXIBLE PIPE SHALL BE STAKED AT 10 FT. CENTERS ALONG THE SLOPE USING MINIMUM 4 INCH SQUARE WOOD POSTS OR STANDARD STEEL POSTS DRIVEN 2 FT. MINIMUM INTO THE GROUND.
4. RIGID PIPE SHALL BE ANCHORED AT BENDS. ANCHORAGE SHALL CONSIST OF A MINIMUM 4 INCH SQUARE WOOD POSTS OR STANDARD STEEL POSTS DRIVEN 2 FT. MINIMUM INTO GROUND, OR EARTHEN THRUST BLOCK.
5. PAYMENT OF BASIN ITEMS ARE INCIDENTAL TO THE COST OF FLEXIBLE STORM DRAIN PIPE.
6. FOR PIPE DIAMETER ON TEMPORARY SLOPE DRAIN SEE TABLE BELOW

TEMPORARY SLOPE DRAIN PIPES

Runoff Flow Rate (cfs)	Pipe Diameter Required (inches)
0 – 6.0	18
6.0 – 9.0	21
9.0 – 12.0	24
12.0 – 20.0	30

NO.	DATE	REV. BY	DESCRIPTION

REVISIONS (OR CHANGE NOTICES)

NEW MEXICO DEPARTMENT OF TRANSPORTATION STANDARD DRAWING

TEMPORARY EROSION & SEDIMENT CONTROL MEASURES PIPE SLOPE DRAIN & SURFACE ROUGHENING

APPROVED Raymond Van Haren 11/29/04
DESIGN ENGINEER DATE

DESIGNED BY___ DRAWN BY ___ CHECKED BY ___

603-01-6/7 SHEET 6 OF 7

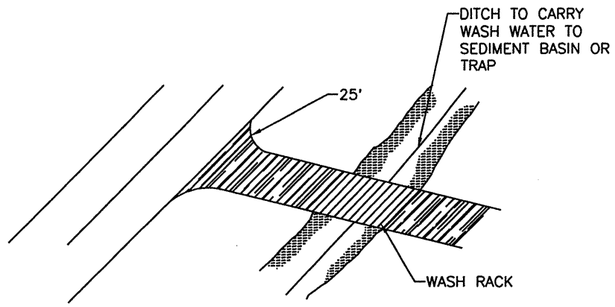

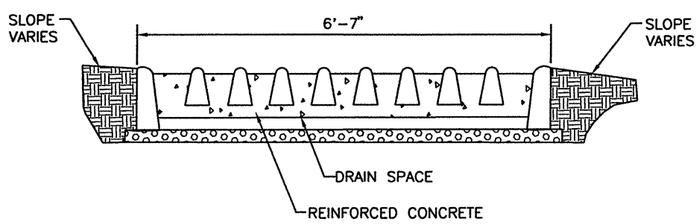

WASH RACK

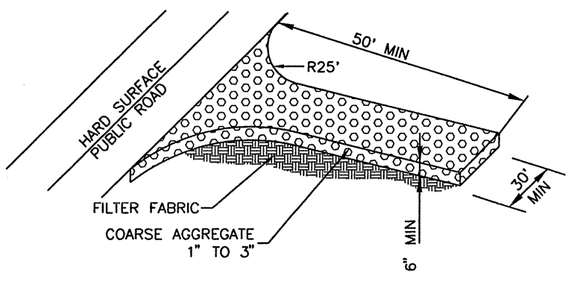

OFFSITE TRACKING PREVENTION

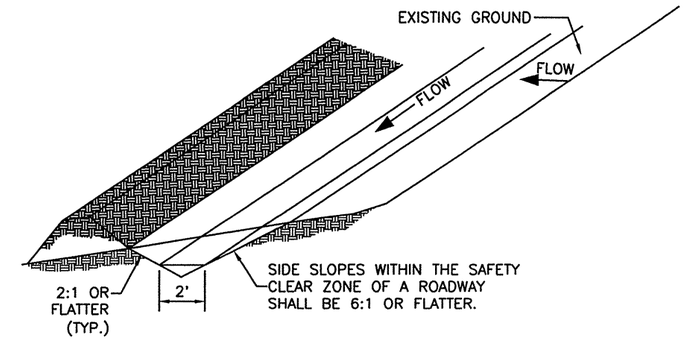

TYPICAL SWALE CONFIGURATION

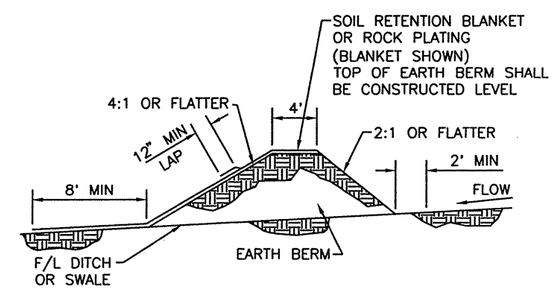

FILTER FABRIC DIVERSION DIKE

DIVERSION DIKE

NO.	DATE	REV. BY	DESCRIPTION

REVISIONS (OR CHANGE NOTICES)

NEW MEXICO
DEPARTMENT OF TRANSPORTATION
STANDARD DRAWING

T.E.S.C.M.
OFFSITE TRACKING
PREVENTION & DIVERSION DIKE

APPROVED Raymunda Van Hoven 11/24/09
DESIGN ENGINEER DATE

DESIGNED BY___ DRAWN BY ___ CHECKED BY ___

603-01-7/7 SHEET 7 OF 7

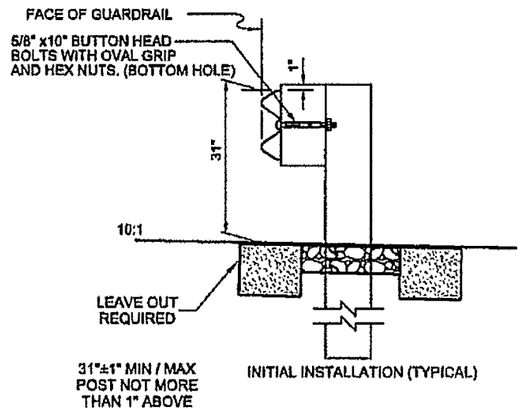

SINGLE FACE W-BEAM GUARDRAIL

NOTES

1. SINGLE AND DOUBLE FACE W-BEAM GUARDRAIL POST SPACING SHALL BE 6'-3" ON CENTER.
2. SINGLE AND DOUBLE FACE W-BEAM GUARDRAIL SHALL USE W6 x 8.5 STEEL POSTS FOR SPACER BLOCK DETAILS.
3. EXISTING POSTS SHALL NOT BE RAISED. REPLACE POSTS AS NECESSARY TO ACHIEVE REQUIRED GUARDRAIL HEIGHT.
4. REFLECTOR TABS SHALL BE PLACED AT 25' INTERVALS (EVERY 25' AT SPLICE) ON ALL GUARDRAIL INSTALLATIONS (12'-6" ON 2 LANE HIGHWAY). THE COLOR OF THE REFLECTIVE SHEETING ON THE REFLECTOR TABS SHALL BE THE SAME AS THE COLOR OF THE SHOULDER LINE PAVEMENT MARKING IN FRONT OF THE BARRIER. TABS SHALL HAVE A MINIMUM OF 8.75 SQ. IN. OF TYPE VIII OR BETTER REFLECTIVE SHEETING ON BOTH SIDES AND SHALL ATTACH SECURELY UNDER HEAD OF 5/8" BUTTON HEAD BOLT.
5. SPLICES SHALL BE LAPPED SO THE FREE END DOES NOT FACE TRAFFIC FLOW.
6. CONSTRUCTION TOLERANCE SHALL BE ± 1" FOR GUARDRAIL HEIGHT FOR SINGLE OR DOUBLE FACE.
7. GUARDRAIL FACE MAY BE PLACED AT EDGE OF SHOULDER ONLY WHEN SLOPES BEHIND GUARDRAIL WILL NOT ALLOW FOR 2' TYPICAL SETBACK.
8. CONSTRUCT POST LEAVE OUT FOR EVERY W-BEAMS INSTALLATION.
9. LEAVE OUT SHALL BE USED IN CONCRETE AT ALL TIMES REGARDLESS OF POST FOR W-BEAM OR THRIE BEAM. LEAVE OUT SHALL BE REQUIRED ON ALL GUARDRAIL POSTS IN CONCRETE.

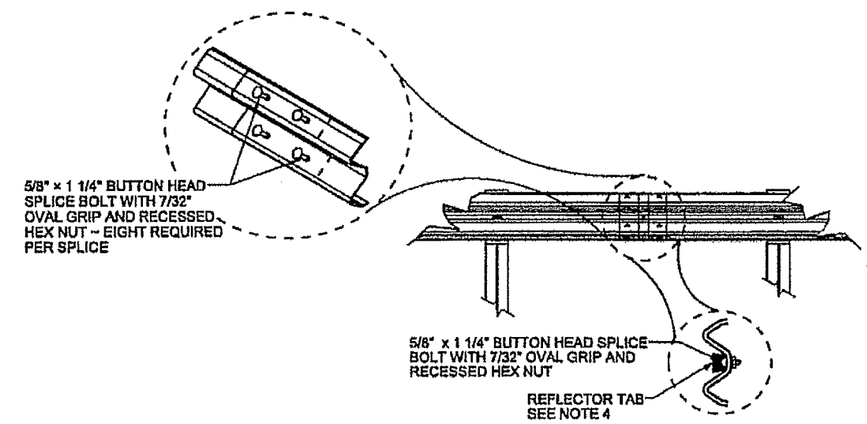

REFLECTOR TABS AT SPLICE

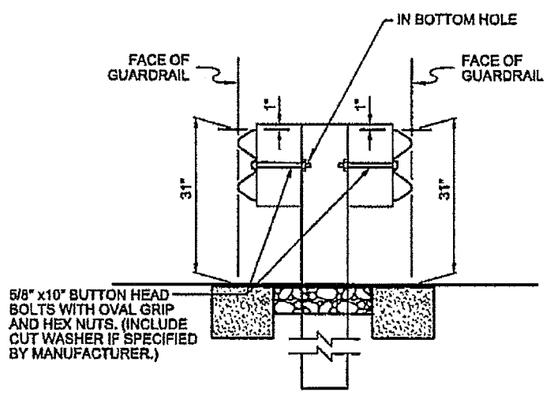

DOUBLE FACE W-BEAM GUARDRAIL

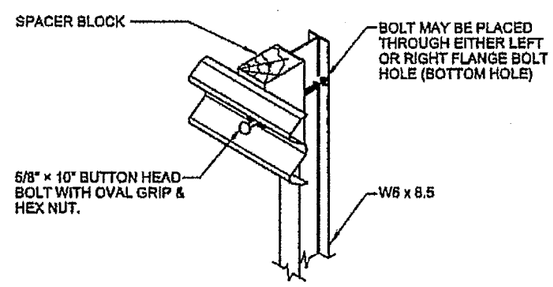

ASSEMBLY DETAIL W-BEAM

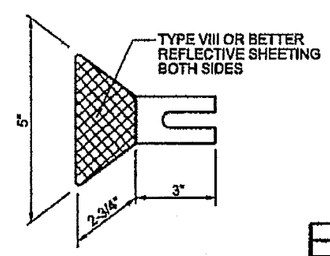

REFLECTORIZED WASHER

NO.	DATE	REV. BY	DESCRIPTION

REVISIONS (OR CHANGE NOTICES)

NEW MEXICO
DEPARTMENT OF TRANSPORTATION
STANDARD DRAWING

W-BEAM GUARDRAIL

APPROVED _____ DESIGN ENGINEER _____ DATE

AFSHIN JAM
NEW MEXICO
16226
7-13-16
LICENSED PROFESSIONAL ENGINEER

DRAWING SCALE = NOT TO SCALE

606-GR31-1/20

SUMMARY
FILENAME

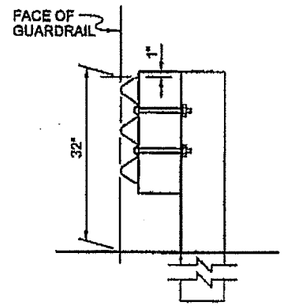

RAIL ASSEMBLY

SINGLE FACE THRIE BEAM GUARDRAIL
(PAID BY LIN. FT.)

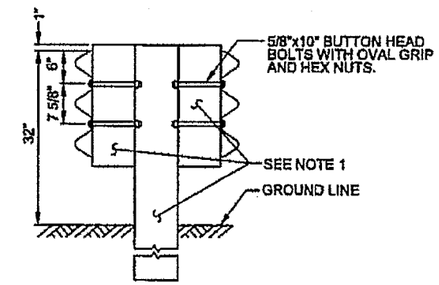

STEEL POST ASSEMBLY

DOUBLE FACE THRIE BEAM GUARDRAIL
(PAID BY LIN. FT.)

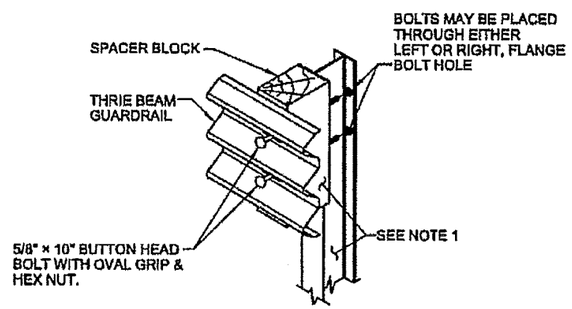

STEEL POST ASSEMBLY

ASSEMBLY DETAIL
THRIE BEAM

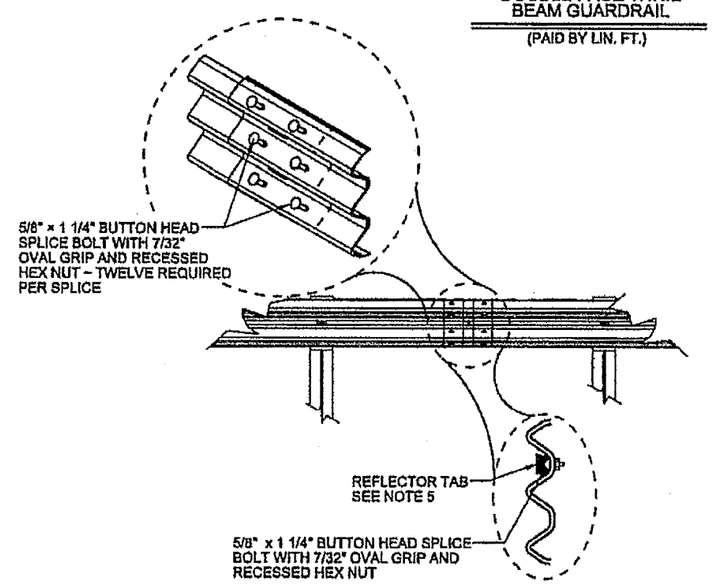

REFLECTOR TAB
AT SPLICE

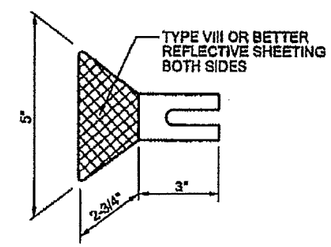

REFLECTORIZED WASHER

NOTES

1. SINGLE AND DOUBLE FACE THRIE BEAM GUARDRAIL SHALL USE W6x15 STEEL POSTS. FOR ADDITIONAL DETAILS SEE SHEET 606-GR31-4/20.
2. UNLESS OTHERWISE SPECIFIED THRIE BEAM GUARDRAIL POST SPACING SHALL BE 6' - 3" ON CENTER.
3. BOLTS ARE TO BE INSTALLED AS SHOWN SO THAT THE THREADED END OF THE BOLTS AND NUTS ARE PLACED AWAY FROM TRAFFIC SIDE OF RAIL.
4. DO NOT PLACE ANY WASHERS UNDER THE BOLTS ON THE TRAFFIC SIDE OF THE BARRIER.
5. REFLECTOR TABS SHALL BE PLACED AT 25' INTERVALS (EVERY 25' AT SPLICE) ON ALL GUARDRAIL INSTALLATIONS (12'-6" ON 2 LANE HIGHWAY). THE COLOR OF THE REFLECTIVE SHEETING ON THE REFLECTOR TABS SHALL BE THE SAME AS THE COLOR OF THE SHOULDER LINE PAVEMENT MARKING IN FRONT OF THE BARRIER. TABS SHALL HAVE A MINIMUM OF 8.75 SQ. IN. OF TYPE VIII OR BETTER REFLECTIVE SHEETING ON BOTH SIDES AND SHALL ATTACH SECURELY UNDER HEAD OF 5/8" BUTTON HEAD BOLT.
6. SPLICES SHALL BE LAPPED SO THE FREE END DOES NOT FACE TRAFFIC FLOW.
7. CONSTRUCTION TOLERANCE SHALL BE +/- 1" FOR GUARDRAIL HEIGHT.
8. LEAVE OUT SHALL BE REQUIRED ON ALL GUARDRAIL POST IN CONCRETE.

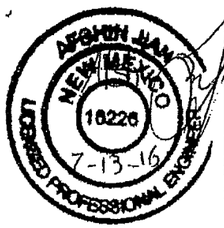

NO.	DATE	REV. BY	DESCRIPTION

REVISIONS (OR CHANGE NOTICES)

NEW MEXICO
DEPARTMENT OF TRANSPORTATION
STANDARD DRAWING

THRIE BEAM GUARDRAIL

APPROVED _____ DESIGN ENGINEER _____ DATE

606-GR31-2/20

DRAWING SCALE = NOT TO SCALE

edd_trf\preliminary drawings & docs\roadside\Working Folder-GR Type 31 Standards\GR31-2_Beam Guardrail Types 3 & 4 (thrie beam).dgn

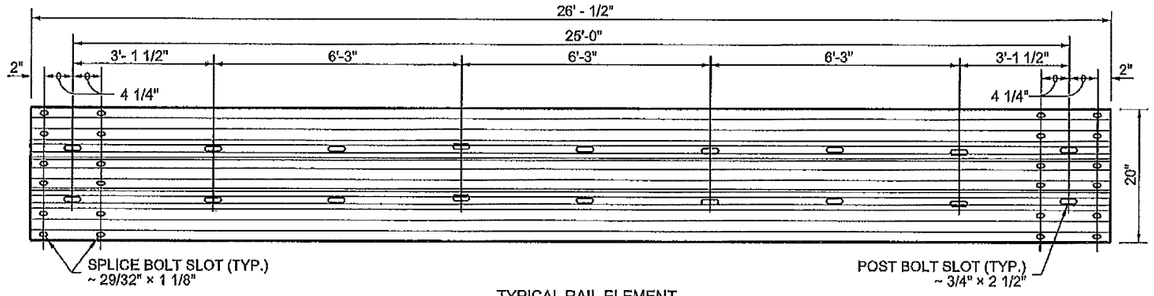

TYPICAL RAIL ELEMENT
25'-0" THRIE BEAM

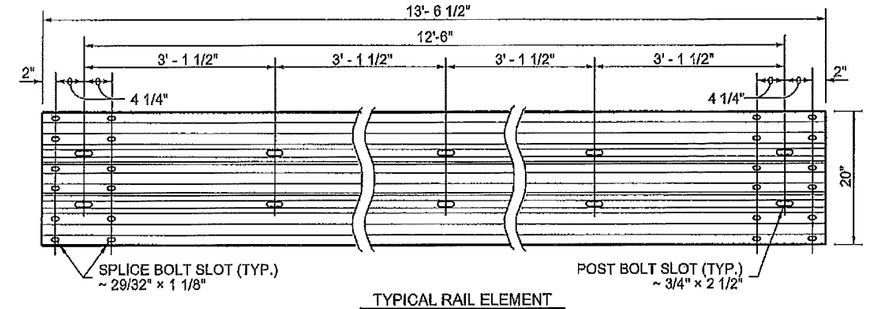

TYPICAL RAIL ELEMENT
12'-6" THRIE BEAM

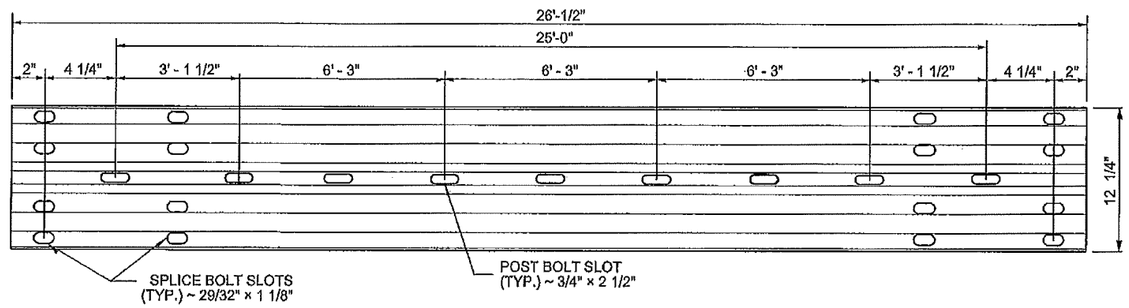

TYPICAL RAIL ELEMENT
25'-0" W-BEAM

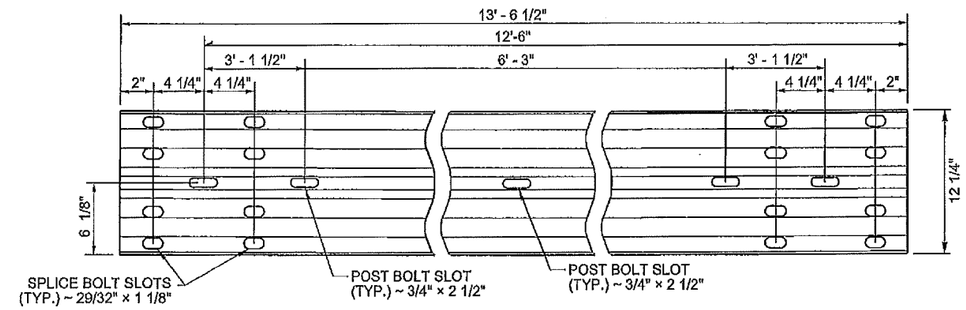

TYPICAL RAIL ELEMENT
12'-6" W-BEAM

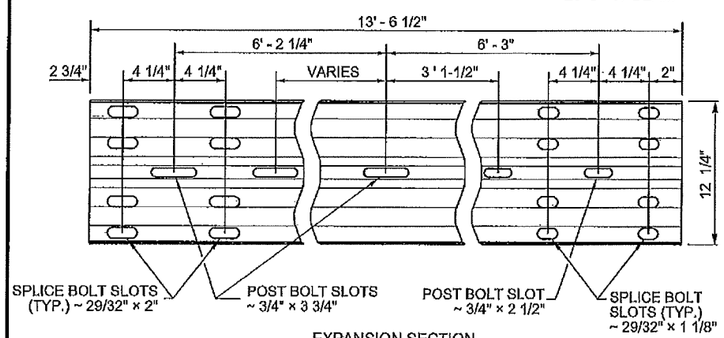

EXPANSION SECTION
W-BEAM

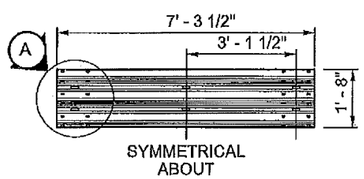

SHORT THRIE BEAM ELEMENT

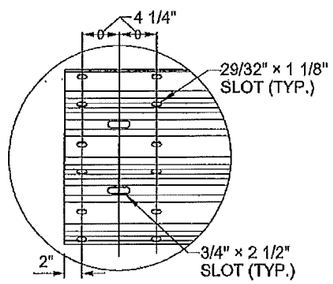

DETAIL A

LEFT
(MIRROR OF RIGHT)

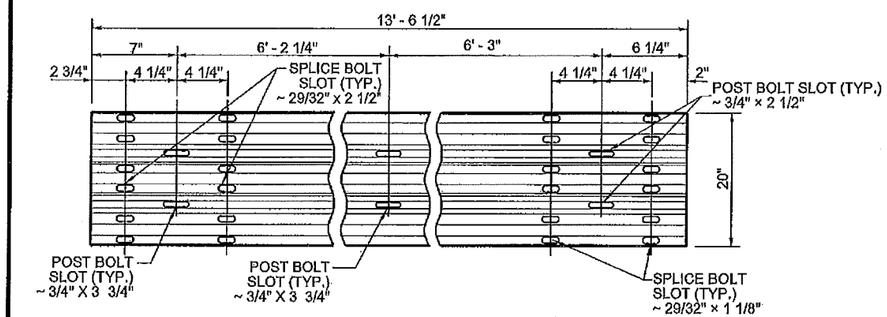

EXPANSION SECTION
THRIE BEAM

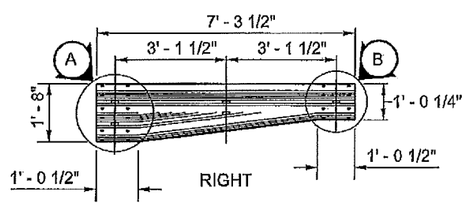

REDUCER ELEMENT
(PAID AS LIN. FT. OF THRIE BEAM)

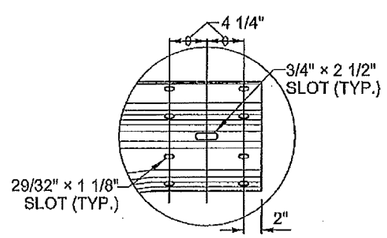

DETAIL B

DRAWING SCALE = NOT TO SCALE

NO.	DATE	REV. BY	DESCRIPTION

REVISIONS (OR CHANGE NOTICES)

NEW MEXICO
DEPARTMENT OF TRANSPORTATION
STANDARD DRAWING

BEAM GUARDRAIL
ELEMENTS

APPROVED _____ DESIGN ENGINEER _____ DATE

606-GR31-3/20

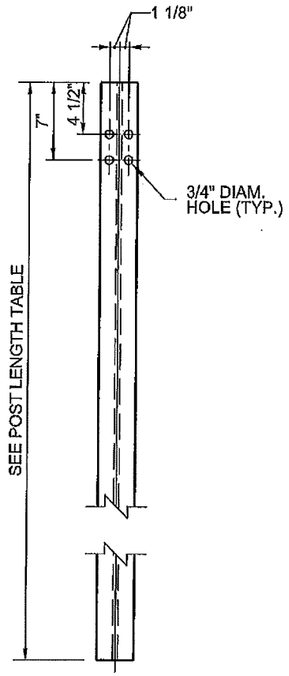

W-BEAM
(W6x8.5)

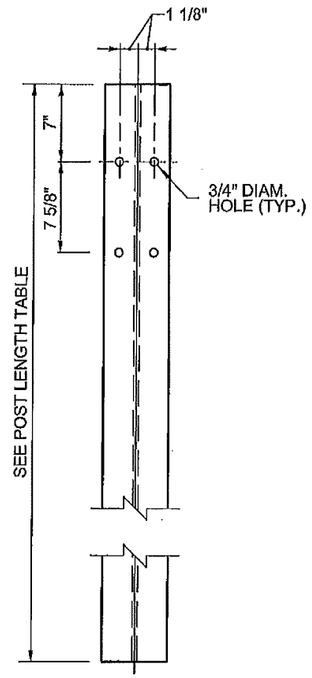

THRIE BEAM
(W6x15)

STEEL POST

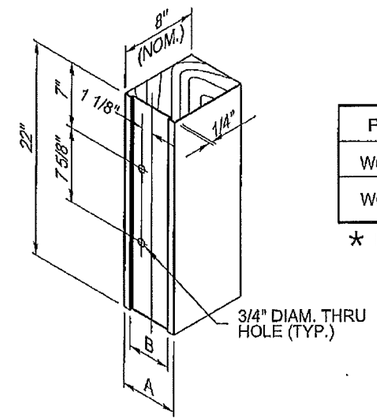

THRIE BEAM SPACER BLOCK
FOR STEEL POST
SEE NOTE

POST	A	B
W6 × 8.5	6"*	4 1/4"
W6 × 15	8"*	6 1/4"

* NOMINAL (NOM.)

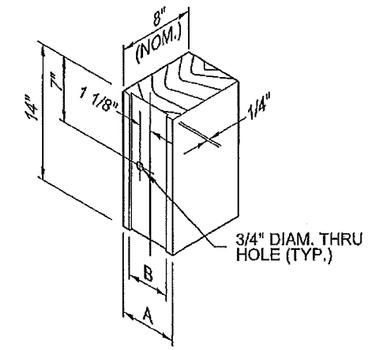

W-BEAM SPACER BLOCK
FOR STEEL POST
SEE NOTE

POST LENGTH TABLE	
DESCRIPTION	STEEL
SINGLE FACE W-BEAM	6' - 0"
DOUBLE FACE W-BEAM	6' - 0"
SINGLE FACE THRIE-BEAM	6' - 6"
DOUBLE FACE THRIE-BEAM	7' - 0"

NOTE:

SPACER BLOCKS MAY CONSIST OF WOOD, PLASTIC, OR COMPOSITE MATERIAL ON THE APPROVED PRODUCTS LIST.

AFSHIN JIAN
NEW MEXICO
16226
5-6-14
LICENSED PROFESSIONAL ENGINEER

DRAWING SCALE = NOT TO SCALE

NO.	DATE	REV. BY	DESCRIPTION
REVISIONS (OR CHANGE NOTICES)			

NEW MEXICO
DEPARTMENT OF TRANSPORTATION
STANDARD DRAWING

BEAM GUARDRAIL
POSTS AND BLOCKS

APPROVED _____ DESIGN ENGINEER _____ DATE

606-GR31-4/20

SUMMARY
FILENAME

W-BEAM GUARDRAIL POST RESTRAINED IN ROCK FORMATION DETAIL

A = DEPTH OF SOIL OVER ROCK FORMATION

B = DEPTH OF EMBEDMENT INTO ROCK FORMATION

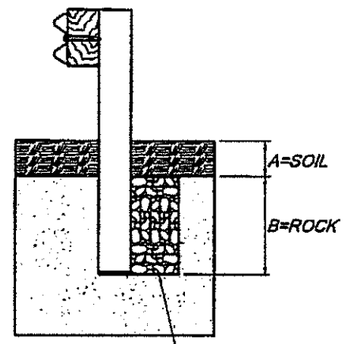

BACKFILL WITH CLEAN COARSE AGGREGATE WITH AN AVERAGE PARTICLE DIAMETER BETWEEN 1/4" AND 1/2". PLACE IN LAYERS AND TAMP.

FOR OVERLYING SOIL DEPTHS (A), RANGING FROM 0" TO 18", THE DEPTH INTO ROCK (B) IS EQUAL TO 24 IN.

CASE 1

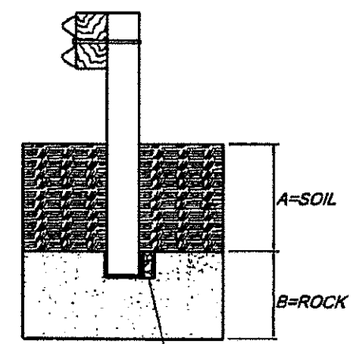

BACKFILL WITH CLEAN COARSE AGGREGATE WITH AN AVERAGE PARTICLE DIAMETER BETWEEN 1/4" AND 1/2". PLACE IN LAYERS AND TAMP.

FOR OVERLYING SOIL DEPTHS (A), RANGING FROM 18" TO FULL POST EMBEDMENT DEPTH, THE REQUIRED DEPTH INTO ROCK (B) IS EQUAL TO FULL POST EMBEDMENT DEPTH MINUS (A). FULL POST EMBEDMENT FOR W-BEAM IS ABOUT 41 IN.

CASE 2

* THIS WIDTH MAY BE INCREASED TO 15" TO ACCOMMODATE CONSTRUCTION TOLERANCES.

** 2' DIAMETER HOLE MAY BE USED.

PLAN VIEW STEEL POSTS IN ROCK FORMATION

EITHER HOLE CONFIGURATION ACCEPTABLE

* THIS WIDTH MAY BE INCREASED TO 15" TO ACCOMMODATE CONSTRUCTION TOLERANCES.

** 2' DIAMETER HOLE MAY BE USED.

PLAN VIEW WOOD POSTS IN ROCK FORMATION

EITHER HOLE CONFIGURATION ACCEPTABLE

APPROVED JOHN NEW MEXICO 16226 7-13-16 LICENSED PROFESSIONAL ENGINEER

NO.	DATE	REV. BY	DESCRIPTION

REVISIONS (OR CHANGE NOTICES)

NEW MEXICO
DEPARTMENT OF TRANSPORTATION
STANDARD DRAWING

W-BEAM GUARDRAIL POST DETAILS
IN ROCK FORMATION

APPROVED _____ DESIGN ENGINEER _____ DATE

DRAWING SCALE = NOT TO SCALE

606-GR31-5/20

edd_trf\preliminary drawings & docs\roadside\Working Folder-GR Type 31 Standards\ GR31-5 Guardrail Post Details Rock & Mow Strip App.dgn

W-BEAM GUARDRAIL POST RESTRAINED IN PAVEMENT DETAIL

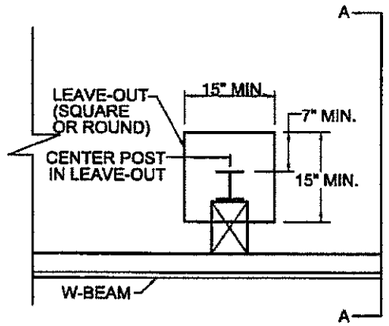

STEEL POST DETAIL

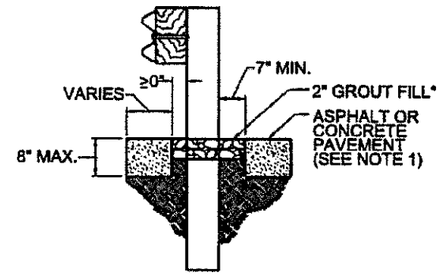

*GROUT FILL HAS A 28-DAY COMPRESSIVE STRENGTH OF 120 PSI OR LESS.

SECTION A-A

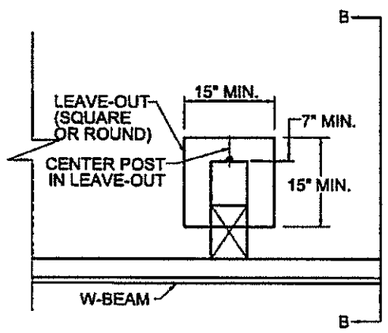

WOOD POST DETAIL

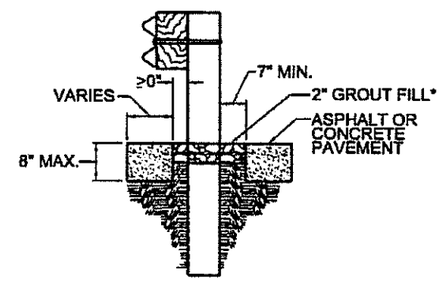

*GROUT FILL HAS A 28-DAY COMPRESSIVE STRENGTH OF 120 PSI OR LESS.

SECTION B-B

NOTE:

1. CONSTRUCTION OF LEAVE-OUTS SHALL BE CONSIDERED INCIDENTAL TO THE GUARDRAIL.

NO.	DATE	REV. BY	DESCRIPTION

REVISIONS (OR CHANGE NOTICES)

NEW MEXICO
DEPARTMENT OF TRANSPORTATION
STANDARD DRAWING

W-BEAM GUARDRAIL POST DETAILS IN PAVEMENT

AFSHIN JIAN
NEW MEXICO
16226
7-13-16
LICENSED PROFESSIONAL ENGINEER

APPROVED _____ DESIGN ENGINEER _____ DATE

DRAWING SCALE = NOT TO SCALE

606-GR31-5A/20

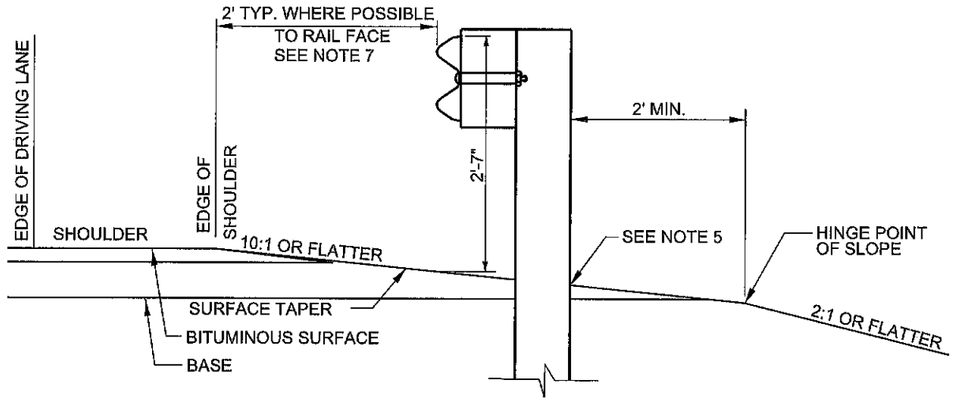

W-BEAM GUARDRAIL STANDARD
INSTALLATION AND SURFACING DETAILS

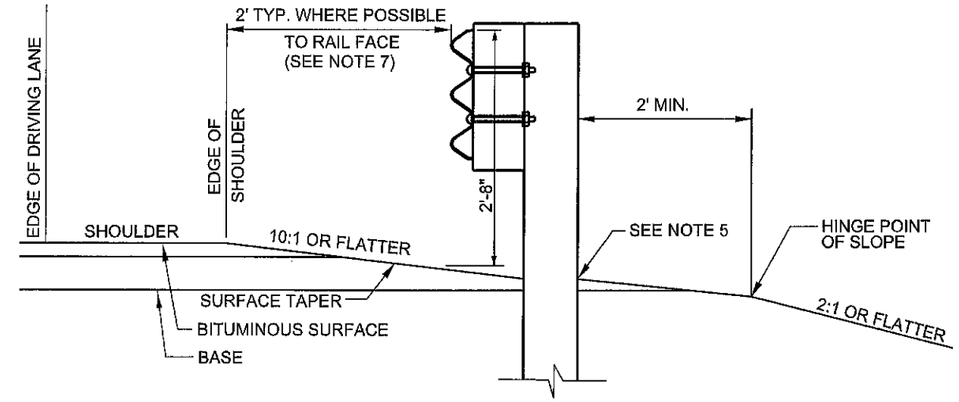

THRIE BEAM GUARDRAIL STANDARD
INSTALLATION AND SURFACING DETAILS

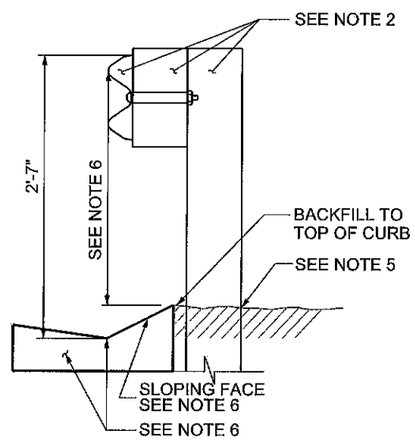

W-BEAM GUARDRAIL
AT FACE OF CURB
ALL DESIGN SPEEDS

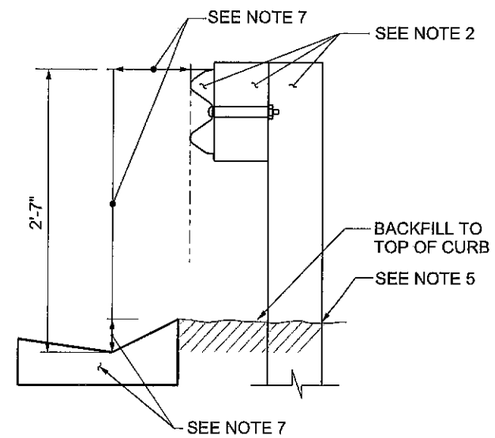

W-BEAM GUARDRAIL
AWAY FROM CURB FACE
DESIGN SPEEDS LESS THAN
45 MPH AND 45 TO 50 MPH

NOTES

1. STANDARD BEAM GUARDRAIL POST SPACING FOR SINGLE AND DOUBLE FACE W-BEAM AND THRIE BEAM SHALL BE 6'-3" ON CENTER.
2. FOR POST AND BLOCK DETAILS, SEE SHEET 606-GR31-4/20.
3. CONSTRUCTION TOLERANCE SHALL BE ± 1/2" FOR GUARDRAIL HEIGHT.
4. GUARDRAIL FACE MAY BE PLACED AT EDGE OF SHOULDER WHEN SLOPES BEHIND GUARDRAIL WILL NOT ALLOW FOR 2' TYPICAL SETBACK WHILE MAINTAINING THE MINIMUM 2' DISTANCE FROM THE SLOPE HINGE POINT.
5. POST LEAVE OUT SHALL BE OBSERVED WHEN POSTS ARE RESTRAINED BY ROCK, ASPHALT OR CONCRETE. SEE SHEET 606-GR31-5/20.
6. SINGLE FACE GUARDRAIL CAN BE USED WITH ANY COMBINATION OF SLOPING FACED CURB THAT IS 6" OR SHORTER IF INSTALLED FLUSH WITH THE FACE OF THE GUARDRAIL ON ROADS WITH DESIGN SPEEDS UP TO 50 MPH. FOR DESIGN SPEEDS FROM 50 MPH TO 60 MPH A 4" OR SHORTER SLOPING CURB IS RECOMMENDED FOR INSTALLATION WHERE THE FACE OF THE CURB IS FLUSH WITH THE FACE OF THE GUARDRAIL. FOR DESIGN SPEEDS ABOVE 60 MPH THE SLOPING FACE OF THE CURB SHALL BE 1V:3H OR FLATTER AND NO TALLER THAN 4" HIGH. THE GUTTER LINE OF THE CURB SHALL BE CONSIDERED TO BE THE SAME LOCATION AS THE FACE OF THE CURB AND SHALL ALSO BE THE LOCATION FROM WHERE GUARDRAIL HEIGHT IS MEASURED.
7. SINGLE FACE GUARDRAIL MAY BE USED WITH 6" HIGH OR SHORTER SLOPING FACED CURB AS LONG AS THE FACE OF THE GUARDRAIL IS LOCATED AT LEAST 8 FT. BEHIND THE FACE OF THE CURB ON ROADS WHERE THE DESIGN SPEED IS UP TO 45 MPH. FOR DESIGN SPEEDS FROM 45 TO 50 MPH GUARDRAILS MAY BE USED WITH 4" HIGH OR SHORTER SLOPING CURBS AS LONG AS THE FACE OF THE METAL BARRIER IS LOCATED AT LEAST 13 FT. BEHIND THE CURB. THE GUTTER LINE OF THE CURB SHALL BE WHERE OFFSET TO RAIL FACE AND RAIL HEIGHT IS MEASURED.

AFSHIN JIAN
NEW MEXICO
16226
5-6-14
LICENSED PROFESSIONAL ENGINEER

NO.	DATE	REV. BY	DESCRIPTION

REVISIONS (OR CHANGE NOTICES)

NEW MEXICO
DEPARTMENT OF TRANSPORTATION
STANDARD DRAWING

TYPICAL
INSTALLATION AND SURFACING
DETAILS

APPROVED _____ DESIGN ENGINEER _____ DATE

DRAWING SCALE = NOT TO SCALE

606-GR31- 6/20

SUMMARY_
FILENAME_

NOTES:

1. END TREATMENT SHOWN IS A GENERAL DEPICTION OF A NOMINAL 50' NMDOT ACCEPTED END TERMINAL THAT IS FHWA ACCEPTED AS CRASHWORTHY AT TEST LEVEL 3 (TL-3) AND MAY BE USED FOR ALL POSTED SPEEDS.
2. ACCEPTED SYSTEMS, ON THE DEPARTMENT'S APPROVED PRODUCT LIST, SHALL BE INSTALLED ACCORDING TO MANUFACTURERS' INSTALLATION INSTRUCTIONS.
3. A REFLECTORIZED OBJECT MARKER SHALL BE INSTALLED. ADHESIVE BACKED REFLECTIVE SHEETING MAY BE APPLIED DIRECTLY TO GUARDRAIL END TREATMENT IMPACT HEAD AS PER THE MANUFACTURER'S RECOMMENDATION. DIRECT APPLIED SHEETING SHALL PROVIDE A SMOOTH SURFACE AND HAVE NO WRINKLES, AIR BUBBLES, CUTS OR TEARS. REFLECTIVE MATERIAL SHALL BE TYPE VIII OR BETTER WITH YELLOW BACK GROUND AND BLACK CHEVRON STRIPES. STRIPES SHALL BE ORIENTED WITH THEIR TOPS AWAY FROM TRAFFIC AND ANGLED DOWN AT 45° TOWARDS TRAFFIC.
4. THESE END TREATMENTS DO NOT REQUIRE AN OFFSET AT THE END. END TREATMENTS SHALL BE INSTALLED ENSURING THAT THE END PIECE IS 2' OFF THE SHOULDER. A MAXIMUM FLARE OF 25:1 OR FLATTER OVER THE LENGTH OF THE TREATMENT IS ALLOWED.
5. END TREATMENTS SHALL BE OF THE LENGTH AND TEST LEVEL SPECIFIED IN THESE DRAWINGS AND AS SPECIFIED BY THE THE MANUFACTURER FOR THE INTENDED END TREATMENT TYPE AND TEST LEVEL. ONLY END TREATMENTS CURRENTLY ON THE NMDOT APPROVED PRODUCT LIST WILL BE ACCEPTED FOR INSTALLATION. FOR SPECIFIC END TREATMENT DETAILS, SEE MANUFACTURERS' DRAWINGS.
6. SHOP DRAWINGS AND MANUFACTURERS' INSTALLATION INSTRUCTIONS SHALL BE SUBMITTED BY THE CONTRACTOR TO THE PROJECT MANAGER A MINIMUM OF FIVE DAYS PRIOR TO INSTALLATION TO ENSURE THAT THE COMPONENTS DELIVERED AND INSTALLED BY THE CONTRACTOR ARE IN ACCORDANCE WITH THE MANUFACTURERS' DRAWINGS, SPECIFICATIONS, AND INSTALLATION INSTRUCTIONS.
7. WARP ALL GRADE TRANSITIONS TO CREATE SMOOTH SURFACE CONTOURS.
8. CONSTRUCT POST LEAVE OUTS FOR W-BEAMS WHEN THEY ARE RESTRAINED BY ROCK, ASPHALT, OR CONCRETE. REFER TO MANUFACTURER'S MANUAL FOR MORE DETAIL ON LEAVE-OUT REQUIRMENTS.

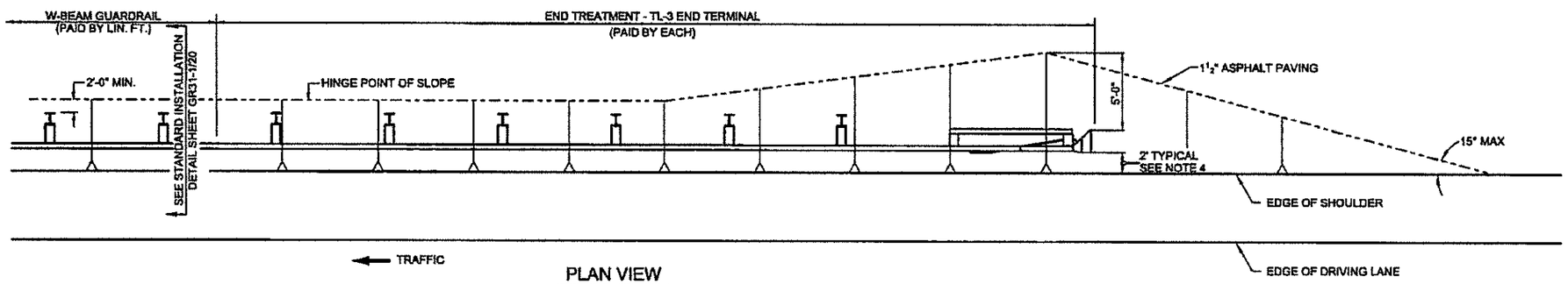

PLAN VIEW

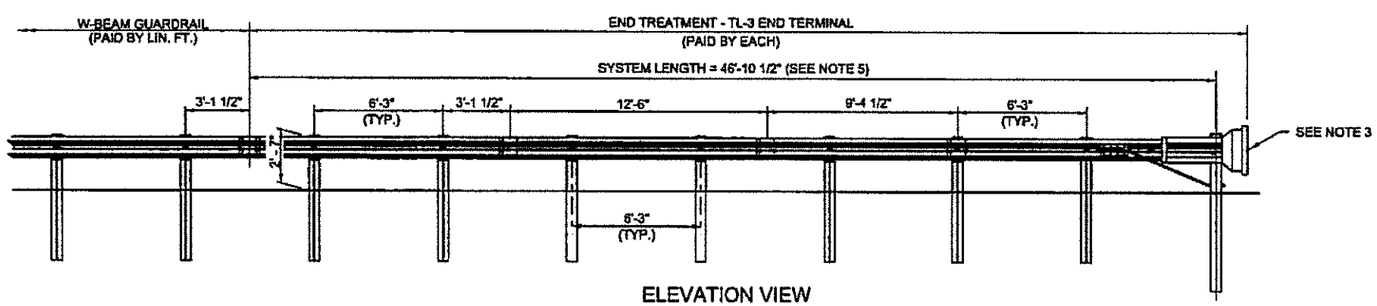

ELEVATION VIEW

DRAWING SCALE = NOT TO SCALE

NO.	DATE	REV. BY	DESCRIPTION

REVISIONS (OR CHANGE NOTICES)

NEW MEXICO
DEPARTMENT OF TRANSPORTATION
STANDARD DRAWING

END TREATMENT
TL-3 END TERMINAL

APPROVED _____ DESIGN ENGINEER _____ DATE

606-GR31-7/20

edd_trf\preliminary drawings & docs\roadside\Working Folder-GR Type 31 Standards\GR31-7 Beam Guardrail End Terminal Type 1.dgn

NOTES:

1. END TREATMENT SHOWN IS A GENERAL DEPICTION OF A NOMINAL 37'-6" NMDOT ACCEPTED END TERMINAL THAT IS FHWA ACCEPTED AS CRASHWORTHY AT TEST LEVEL 2 (TL-2) AND MAY BE USED IN APPLICATIONS WITH SPEEDS OF 40 MPH OR LESS.
2. ACCEPTED END TERMINALS, ON THE DEPARTMENT'S APPROVED PRODUCT LIST SHALL BE INSTALLED ACCORDING TO MANUFACTURERS' INSTALLATION INSTRUCTIONS.
3. A REFLECTORIZED OBJECT MARKER SHALL BE INSTALLED. ADHESIVE BACKED REFLECTIVE SHEETING MAY BE APPLIED DIRECTLY TO GUARDRAIL END TREATMENT IMPACT HEAD AS PER THE MANUFACTURERS RECOMMENDATION. DIRECT APPLIED SHEETING SHALL PROVIDE A SMOOTH SURFACE AND HAVE NO WRINKLES, AIR BUBBLES, CUTS OR TEARS. REFLECTIVE MATERIAL SHALL BE TYPE VIII OR BETTER WITH YELLOW BACK GROUND AND BLACK CHEVRON STRIPES. STRIPES SHALL BE ORIENTED WITH THEIR TOPS AWAY FROM TRAFFIC AND ANGLED DOWN AT 45° TOWARDS TRAFFIC.
4. THESE END TREATMENTS DO NOT REQUIRE AN OFFSET AT THE END. END TREATMENTS SHALL BE INSTALLED ENSURING THE END PIECE IS 2' OFF THE SHOULDER. A MAXIMUM FLARE OF 25:1 OR FLATTER OVER THE LENGTH OF THE TREATMENT IS ALLOWED.
5. END TREATMENTS SHALL BE OF THE LENGTH AND TEST LEVEL SPECIFIED IN THESE DRAWINGS AND AS SPECIFIED BY THE MANUFACTURER FOR THE INTENDED END TREATMENT TYPE TEST LEVEL. ONLY END TREATMENTS CURRENTLY ON THE NMDOT APPROVED PRODUCTS LIST WILL BE ACCEPTED FOR INSTALLATION. FOR SPECIFIC END TREATMENT DETAILS, SEE MANUFACTURERS' DRAWINGS.
6. SHOP DRAWINGS AND MANUFACTURERS' INSTALLATION INSTRUCTIONS SHALL BE SUBMITTED BY THE CONTRACTOR TO THE PROJECT MANAGER A MINIMUM OF FIVE DAYS PRIOR TO INSTALLATION TO ENSURE THAT THE COMPONENTS DELIVERED AND INSTALLED BY THE CONTRACTOR ARE IN ACCORDANCE WITH THE MANUFACTURER'S DRAWINGS, SPECIFICATIONS, AND INSTALLATION INSTRUCTIONS.
7. WARP ALL GRADE TRANSITIONS TO CREATE SMOOTH SURFACE CONTOURS.
8. CONSTRUCT POST LAVE OUTS FOR W-BEAMS WHEN THEY ARE RESTRAINED BY ROCK, ASPHALT, OR CONCRETE SHALL USE LEAVE-OUT. REFER TO MANUFACTURE'S MANUAL FOR MORE DETAIL ON LEAVE-OUT REQUIREMENTS.

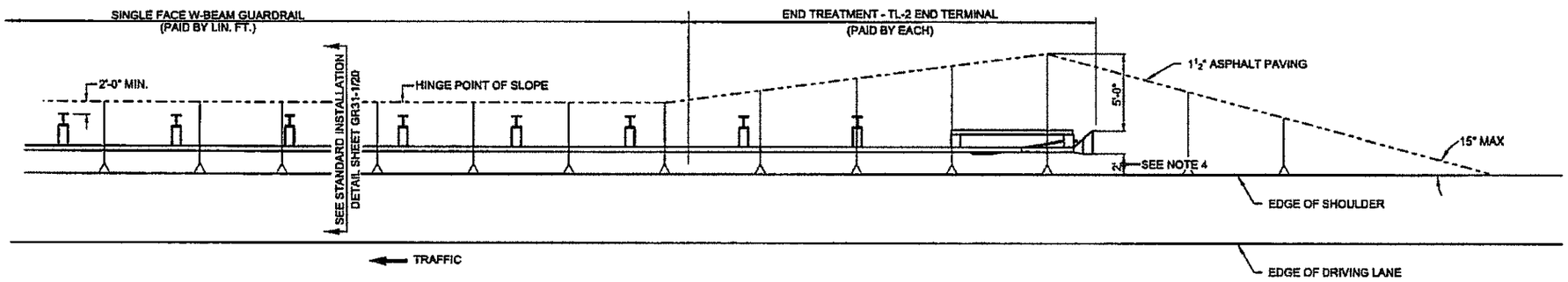

PLAN VIEW

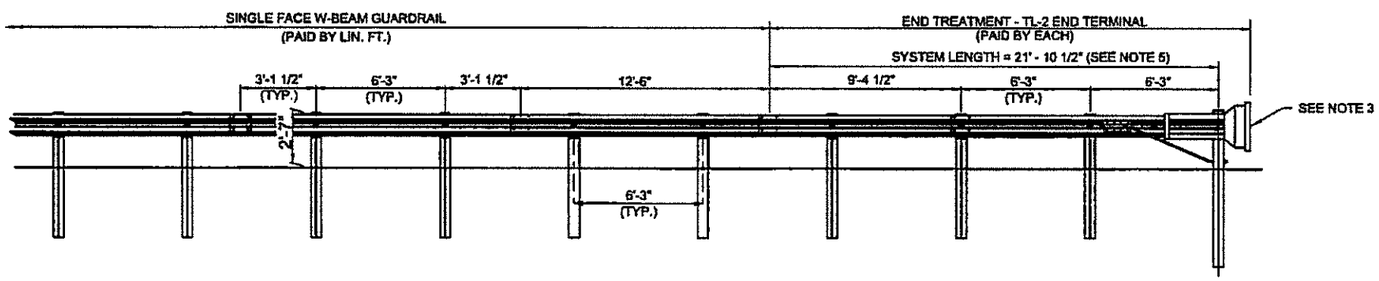

ELEVATION VIEW

NO.	DATE	REV. BY	DESCRIPTION

REVISIONS (OR CHANGE NOTICES)

NEW MEXICO
DEPARTMENT OF TRANSPORTATION
STANDARD DRAWING

END TREATMENT
TL-2 END TERMINAL

APPROVED _____ DESIGN ENGINEER _____ DATE

DRAWING SCALE = NOT TO SCALE

606-GR31-8/20

NOTES:

1. FOR USE ON THE DOWNSTREAM END OF GUARDRAIL RUNS, WHEN A CRASHWORTHY TL-3 OR TL-2 END TERMINAL IS NOT REQUIRED.
2. ACCEPTED ANCHOR SYSTEMS ON THE DEPARTMENT'S APPROVED PRODUCTS LIST SHALL BE INSTALLED ACCORDING TO MANUFACTURERS' INSTALLATION INSTRUCTIONS.
3. SHOP DRAWINGS AND MANUFACTURER'S INSTALLATION INSTRUCTIONS SHALL BE SUBMITTED BY THE CONTRACTOR TO THE PROJECT ENGINEER A MINIMUM OF FIVE DAYS PRIOR TO INSTALLATION.
4. FOR ADDITIONAL DETAILS NOT SHOWN, SEE SHEET 606-GR31-11/20 AND SHEET 606-GR31-12/20.
5. END TREATMENT DOES NOT ADDRESS LENGTH OF NEED (LON). PROVIDE GUARDRAIL ADDRESSING (LON) BY THE 6TH POST FROM THE END.
6. CONSTRUCT POST LEAVE OUTS FOR W-BEAMS WHEN THEY ARE RESTRAINED BY ROCK, ASPHALT, OR CONCRETE, REFER TO THE MANUFACTURER'S MANUAL FOR MORE DETAIL ON LEAVE OUT RQUIREMENTS.

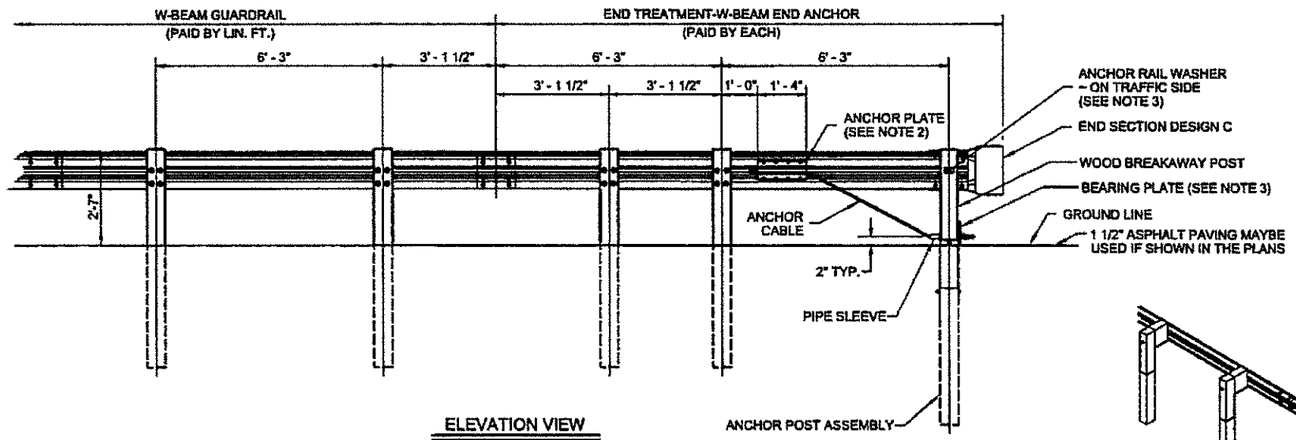

ELEVATION VIEW

END TREATMENT
W-BEAM END ANCHOR
PAID AS EACH

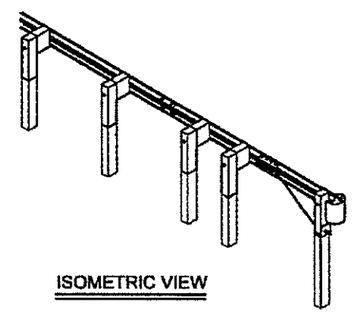

ISOMETRIC VIEW

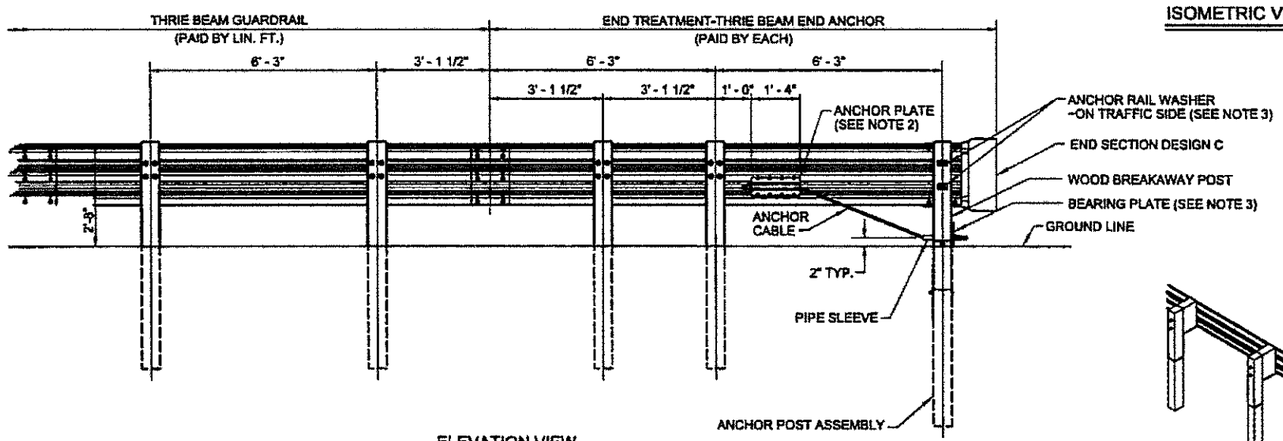

ELEVATION VIEW

END TREATMENT
THRIE BEAM END ANCHOR
PAID AS EACH

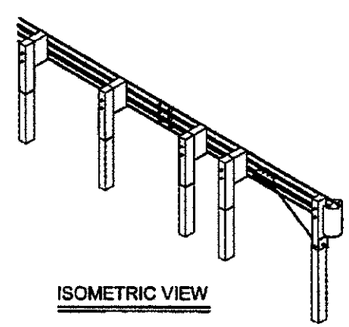

ISOMETRIC VIEW

DRAWING SCALE = NOT TO SCALE

NO.	DATE	REV. BY	DESCRIPTION

REVISIONS (OR CHANGE NOTICES)

NEW MEXICO
DEPARTMENT OF TRANSPORTATION
STANDARD DRAWING

END TREATMENT
W-BEAM END ANCHOR
& THRIE BEAM END ANCHOR

APPROVED _____ DESIGN ENGINEER _____ DATE

606-GR31-9/20

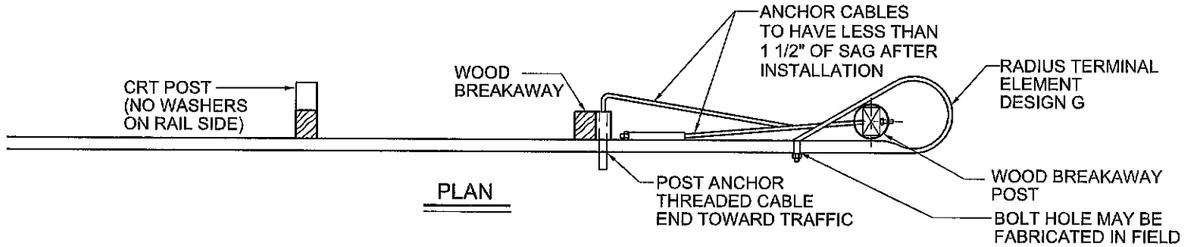

PLAN

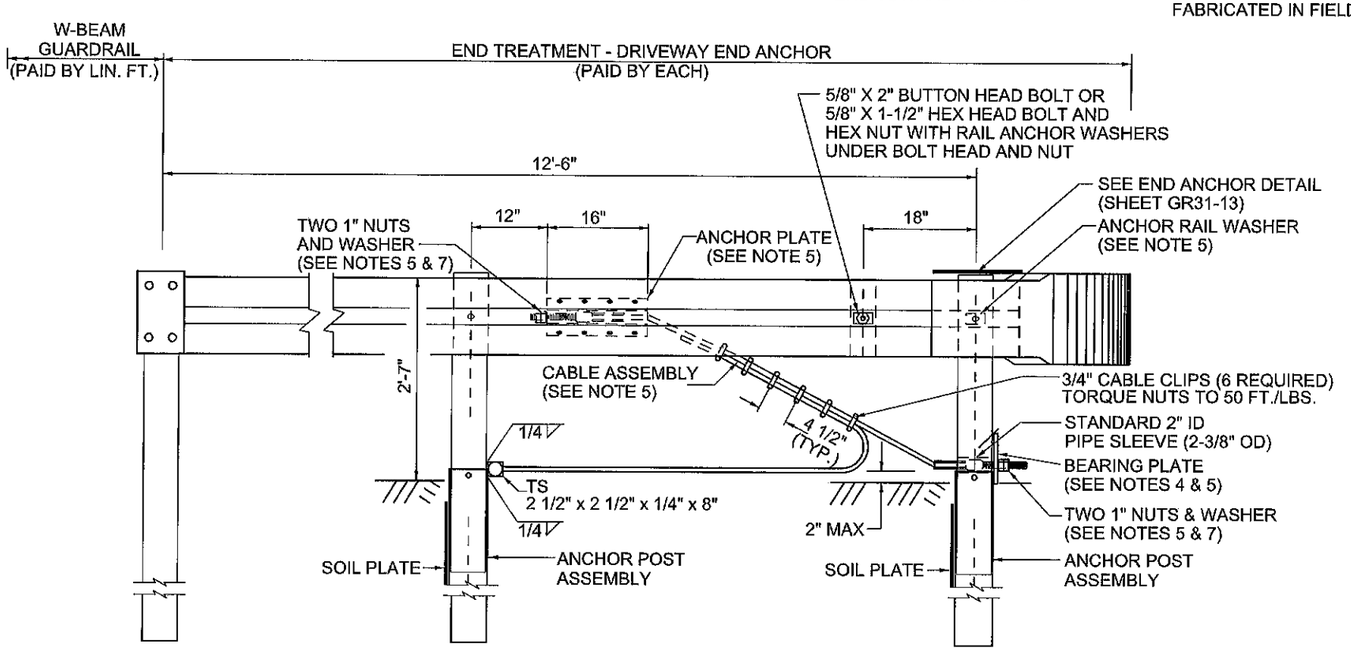

END TREATMENT - DRIVEWAY END ANCHOR

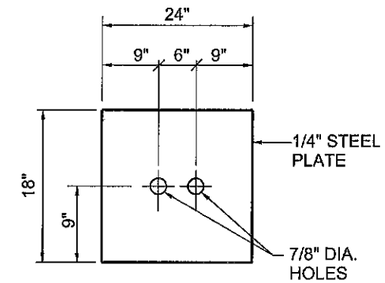

SOIL PLATE DETAIL

NOTES:

1. END TREATMENT SHOWN IS A GENERAL DEPICTION OF A NMDOT ACCEPTED END ANCHOR THAT IS FHWA SPECIFIED (SEE FHWA TECHNICAL ADVISORY T5040-320 ON THE FHWA WEBSITE FOR DETAILS). DRIVEWAY END ANCHORS SHOULD ONLY BE USED WHEN THERE IS INSUFFICENT SPACE TO PROPERLY INSTALL A TL-2 END TERMINAL (SHEET 606-GR31-8/20) OR A STANDARD END ANCHOR (SHEET 606-GR31-9/20) ON THE MINOR APPROACH OR DRIVEWAY. THIS END TREATMENT SHALL NOT BE USED ON THE MAINLINE.
2. FOR CURVED GUARDRAIL DETAILS SEE POST ANCHOR DETAILS ON SHEET 606-G31-14/20.
3. FOR CONTROLLED RELEASE TERMINAL (CRT) POST DETAIL, SEE SHEET 606-G31-14/20.
4. TACK WELD OR TOENAIL BEARING PLATE WITH 10D NAIL AT CORNERS TO PREVENT TURNING. BEND THE NAIL OVER THE BEARING PLATE.
5. FOR DETAILS NOT SHOWN SEE END ANCHORAGE DETAIL ON SHEET 606-GR31-13/20.
6. THE WOOD BREAKAWAY POSTS SHALL BE S4S TIMBER WITH A STRESS GRADE MARKED OR CERTIFIED BY A RECOGNIZED ASSOCIATION OR AGENCY WHICH IS CERTIFIED BY THE BOARD OF REVIEW. AMERICAN LUMBER STANDARDS COMMITTEE TO GRADE THE SPECIES. WOOD PRESERVATIVES SHALL CONFORM TO THE REQUIREMENTS OF AASHTO DESIGNATION M133.
7. OUTSIDE NUT WILL BE TORQUED AGAINST INSIDE NUT A MINIMUM OF 100 FT./LBS.

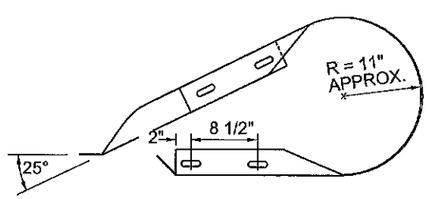

PLAN

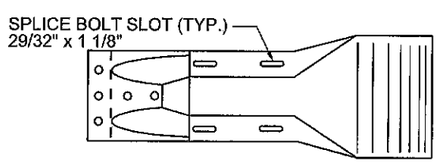

ELEVATION

RADIUS TERMINAL ELEMENT DESIGN G

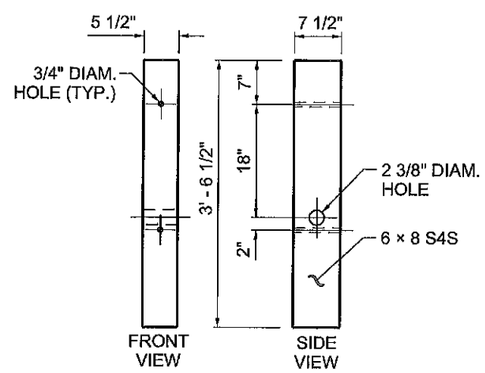

W-BEAM

WOOD BREAKAWAY POST

SEE NOTE 5

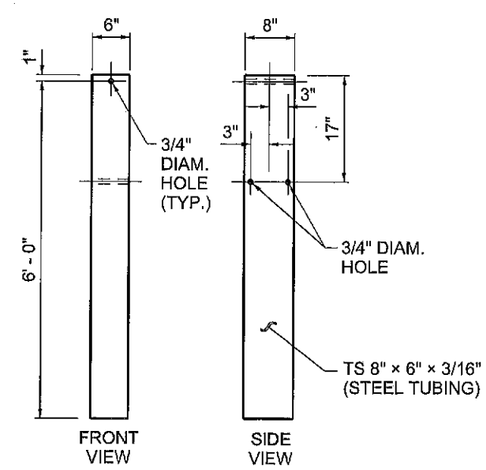

FOUNDATION TUBE

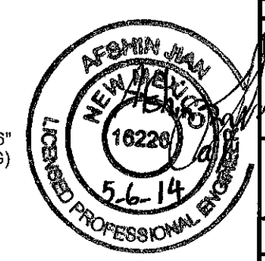

NO.	DATE	REV. BY	DESCRIPTION

REVISIONS (OR CHANGE NOTICES)

NEW MEXICO
DEPARTMENT OF TRANSPORTATION
STANDARD DRAWING

END TREATMENT
DRIVEWAY END ANCHOR

APPROVED _____ DESIGN ENGINEER _____ DATE

DRAWING SCALE = NOT TO SCALE

606-GR31-10/20

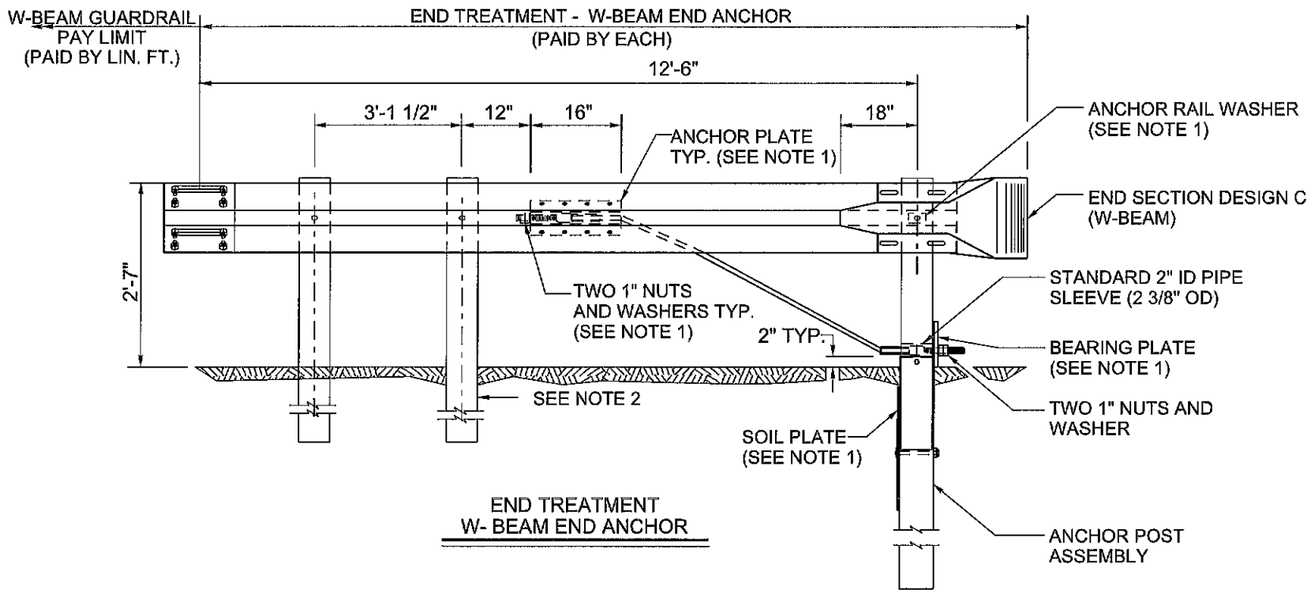

END TREATMENT
W- BEAM END ANCHOR

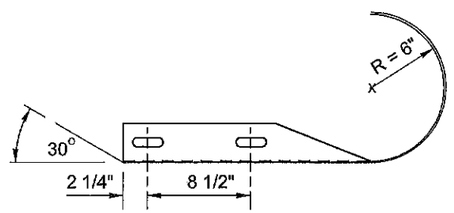

PLAN
DESIGN C

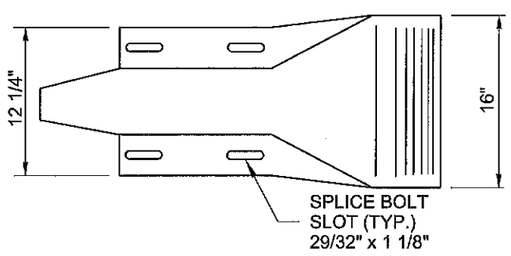

ELEVATION
DESIGN C

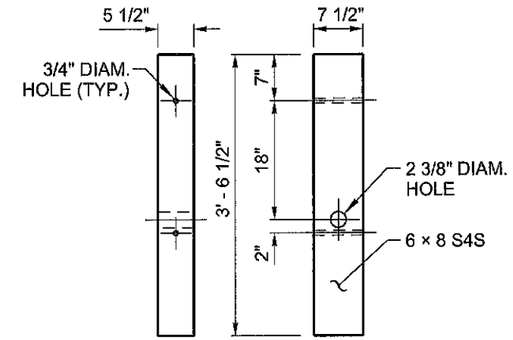

W-BEAM
WOOD BREAKAWAY POST

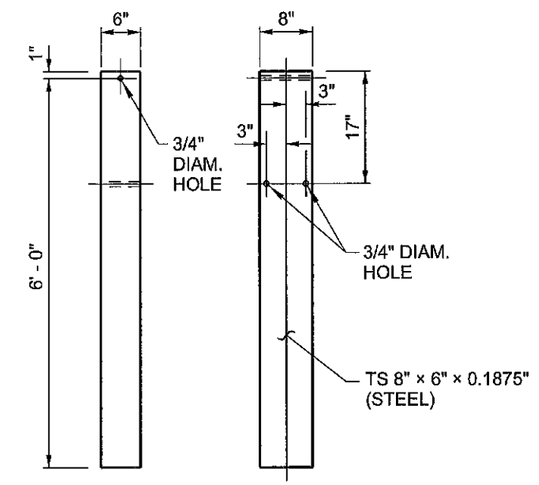

FOUNDATION TUBE

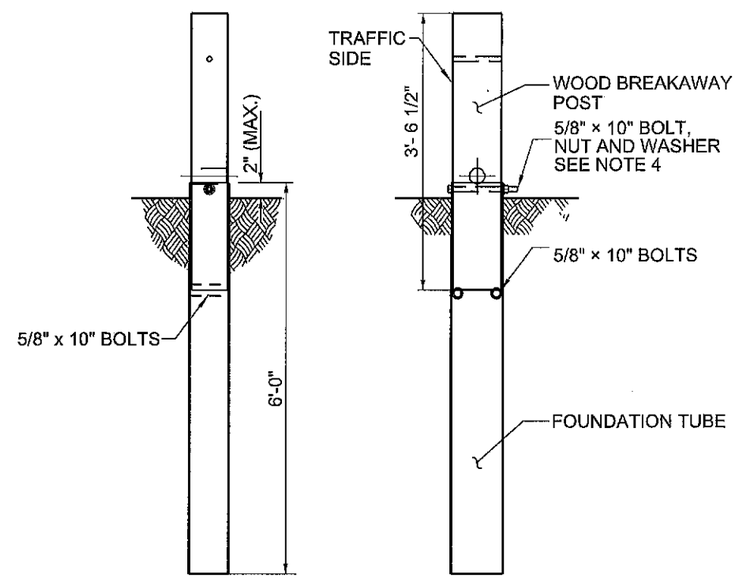

FRONT VIEW SIDE VIEW

ANCHOR POST ASSEMBLY

NOTES:

1. FOR DETAILS NOT SHOWN, SEE SHEET 606-GR31-13/20.
2. POST AND BLOCK SHALL MATCH BEAM GUARDRAIL POSTS.
3. THE WOOD, BREAKAWAY POSTS SHALL BE S4S TIMBER WITH A STRESS GRADE MARKED OR CERTIFIED BY A RECOGNIZED ASSOCIATION OR AGENCY WHICH IS CERTIFIED BY THE BOARD OF REVIEW. AMERICAN LUMBER STANDARDS COMMITTEE TO GRADE THE SPECIES. WOOD PRESERVATIVES SHALL COMPLY TO THE REQUIREMENTS OF AASHTO DESIGNATION M133.
4. BOLT SHALL BE INSTALLED FROM THE EMBANKMENT SIDE.

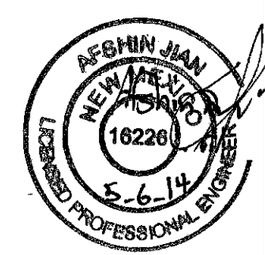

DRAWING SCALE = NOT TO SCALE

NO.	DATE	REV. BY	DESCRIPTION

REVISIONS (OR CHANGE NOTICES)

NEW MEXICO
DEPARTMENT OF TRANSPORTATION
STANDARD DRAWING

END TREATMENT
W-BEAM END ANCHOR DETAILS

APPROVED _____ DESIGN ENGINEER _____ DATE

606-GR31-11/20

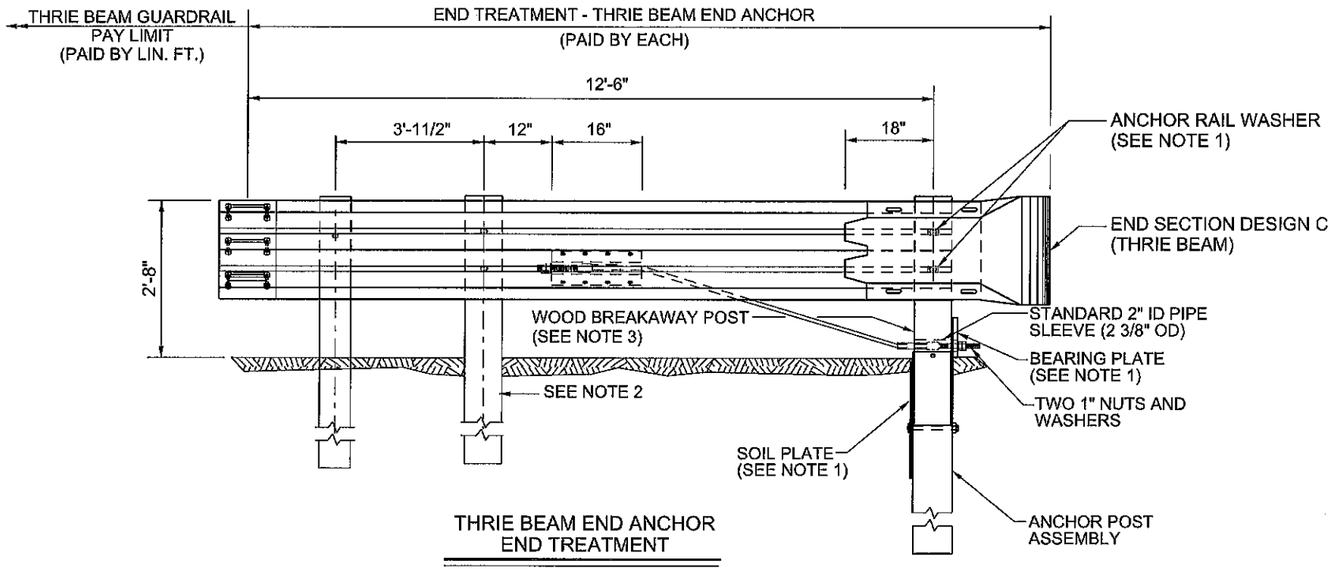

THRIE BEAM END ANCHOR
END TREATMENT

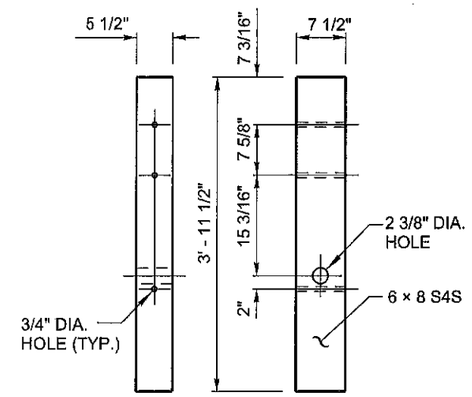

THRIE BEAM
WOOD BREAKAWAY POSTS
SEE NOTE 3

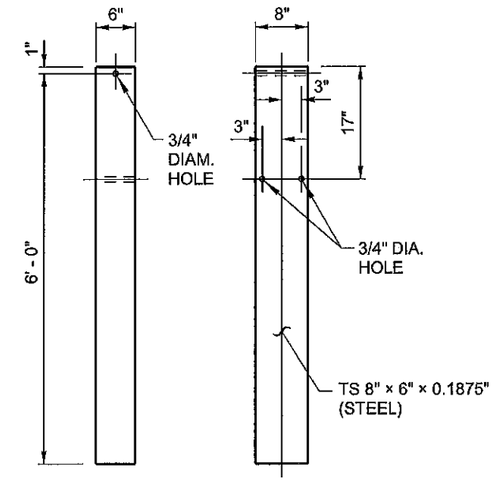

FOUNDATION TUBE

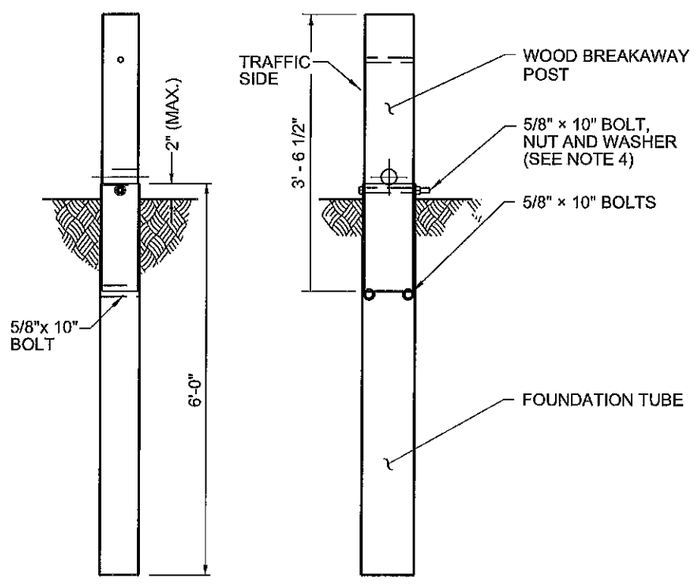

FRONT VIEW SIDE VIEW

ANCHOR POST ASSEMBLY

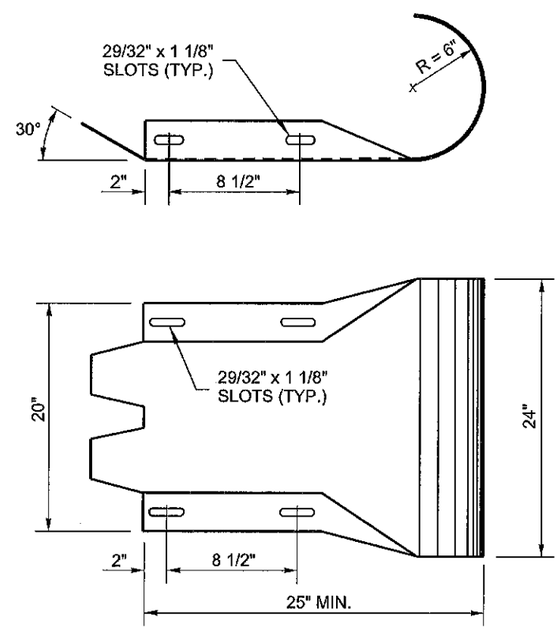

DESIGN C (THRIE BEAM)

NOTES:

1. FOR DETAILS NOT SHOWN, SEE SHEET 606-GR31-13/20.
2. POST AND BLOCK SHALL MATCH BEAM GUARDRAIL POSTS.
3. THE WOOD, BREAKAWAY POSTS SHALL BE S4S TIMBER WITH A STRESS GRADE MARKED OR CERTIFIED BY A RECOGNIZED ASSOCIATION OR AGENCY WHIICH IS CERTIFIED BY THE BOARD OF REVIEW. AMERICAN LUMBER STANDARDS COMMITTEE TO GRADE THE SPECIES. WOOD PRESERVATIVES SHALL COMPLY TO THE REQUIREMENTS OF AASHTO DESIGNATION M133.
4. BOLT SHALL BE INSTALLED FROM THE EMBANKMENT SIDE.

NO.	DATE	REV. BY	DESCRIPTION

REVISIONS (OR CHANGE NOTICES)

NEW MEXICO
DEPARTMENT OF TRANSPORTATION
STANDARD DRAWING

END TREATMENT
THRIE BEAM END ANCHOR DETAILS

APPROVED _____ DESIGN ENGINEER _____ DATE

DRAWING SCALE = NOT TO SCALE

606-GR31-12/20

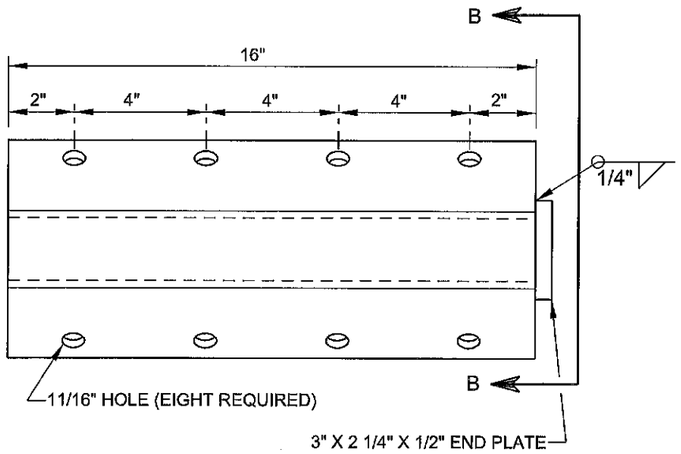

ELEVATION

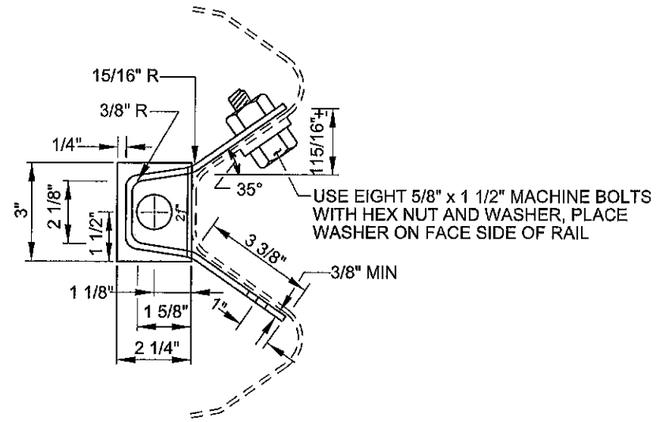

SECTION B-B

ANCHOR PLATE

SEE NOTE 1

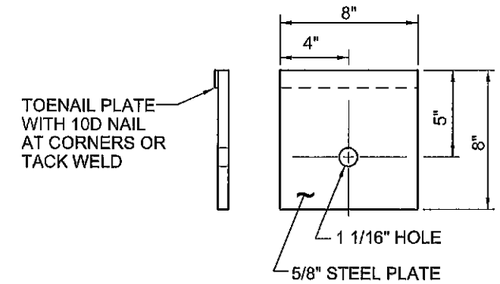

BEARING PLATE

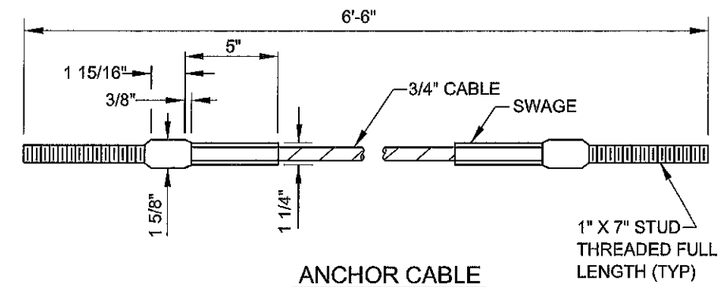

ANCHOR CABLE

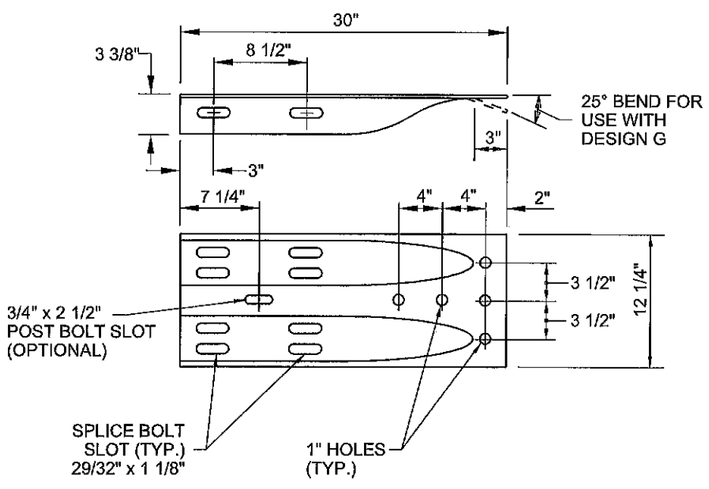

END SECTION
W-BEAM

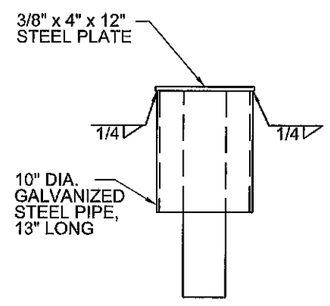

END ANCHOR DETAIL

(SEE SHEET 606-GR31-10/20)

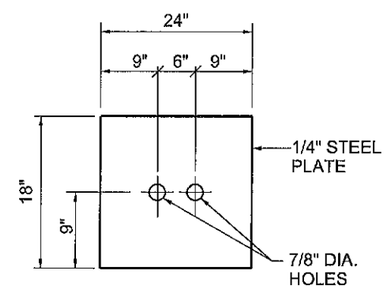

SOIL PLATE DETAIL

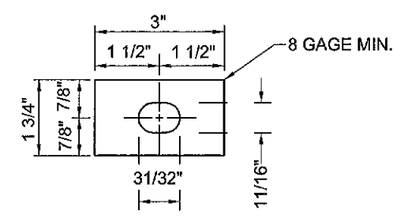

ANCHOR RAIL WASHER

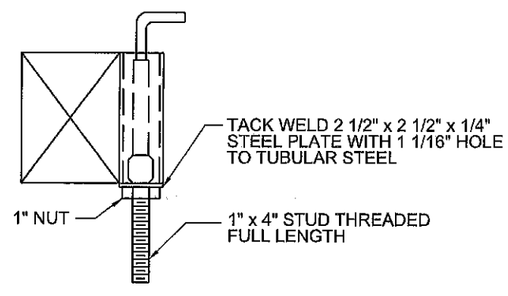

POST ANCHOR DETAIL

(SEE SHEET 606-GR31-10/20)

AFSHIN JIAN
NEW MEXICO
16226
5-6-14
LICENSED PROFESSIONAL ENGINEER

DRAWING SCALE = NOT TO SCALE

NO.	DATE	REV. BY	DESCRIPTION

REVISIONS (OR CHANGE NOTICES)

NEW MEXICO
DEPARTMENT OF TRANSPORTATION
STANDARD DRAWING

END TREATMENT
DRIVEWAY END ANCHOR DETAILS

APPROVED _____ DESIGN ENGINEER _____ DATE

606-GR31-13/20

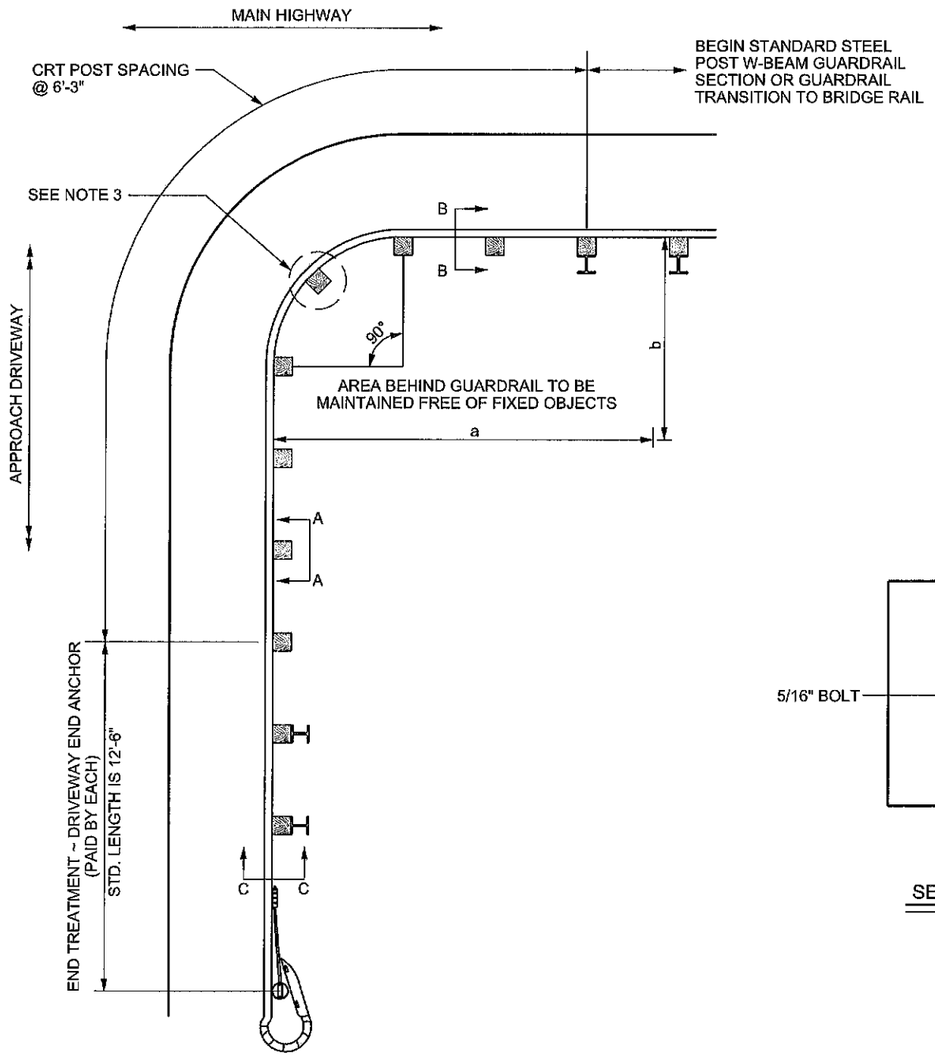

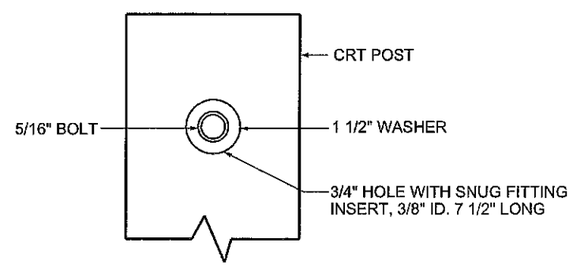

SECTION A-A

NOTES:

1. ALL MATERIALS AND WORKMANSHIP SHALL CONFORM TO THE NEW MEXICO DEPARTMENT OF TRANSPORTATION STANDARD SPECIFICATIONS FOR HIGHWAY AND BRIDGE CONSTRUCTION (CURRENT EDITION).
2. ALL HARDWARE SHALL MEET FHWA CRASHWORTHINESS REQUIREMENTS AS PER NCHRP 350 AND MASH GUIDELINES AND SHALL BE ON THE DEPARTMENT'S APPROVED PRODUCT LIST.
3. THE RAIL IS NOT BOLTED TO THE CRT POST AT THE CENTER OF THE NOSE FOR THE 8'-6" RADIUS INSTALLATION ONLY.
4. NO WASHERS ARE USED ON THE 5/8" BUTTON HEAD BOLTS CONNECTING THE RAIL TO THE CRT POSTS.
5. THE CURVED GUARDRAIL SECTION SHALL BE SHOP FABRICATED.
6. THE SLOPE IN FRONT OF THE CURVED GUARDRAIL SHOULD NOT EXCEED 15:1.
7. CURVED GUARDRAIL SHALL ONLY BE USED ON OPERATING SPEEDS OF 60 MPH OR LESS. 35' RADIUS CURVED GUARDRAIL SHOULD ONLY BE USED ON OPERATING SPEEDS OF 50 MPH OR LESS.
8. CURVED GUARDRAIL SHALL BE PAID AS SINGLE FACE W-BEAM GUARDRAIL.

RADIUS	NO. OF CRT POINTS	NOMINAL LENGTH OF BENT RAIL	REQUIRED AREA FREE OF FIXED OBJECTS
			a x b
8' - 6"	5	12'-6"	25' X 15'
17'	6	25'	30' X 15'
25'-6"	8	37'-6"	40' X 20'
35'	11	50'	50' X 20'

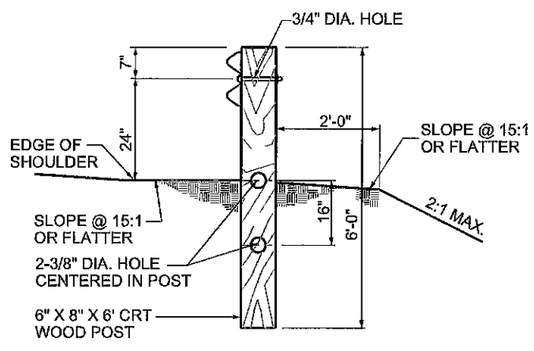

SECTION B-B

CONTROLLED RELEASING TERMINAL POST (CRT)

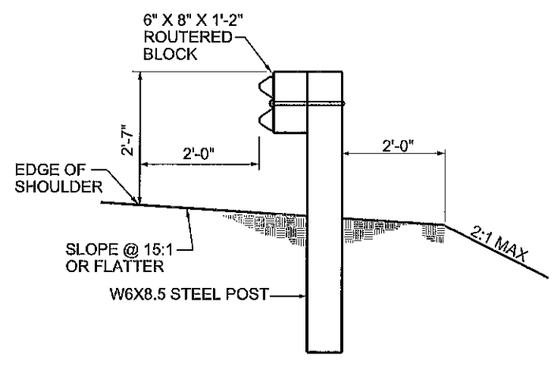

SECTION C-C

NO.	DATE	REV. BY	DESCRIPTION

REVISIONS (OR CHANGE NOTICES)

NEW MEXICO
DEPARTMENT OF TRANSPORTATION
STANDARD DRAWING

CURVED GUARDRAIL DETAILS

APPROVED _____ DESIGN ENGINEER _____ DATE

606-GR31-14/20

DRAWING SCALE = NOT TO SCALE

FLARE RATE TABLE	
RATE	POSTED SPEED (MPH)
16:1	75
15:1	70
14:1	60
12:1	55
11:1	50
10:1	45
9:1	40 OR LESS

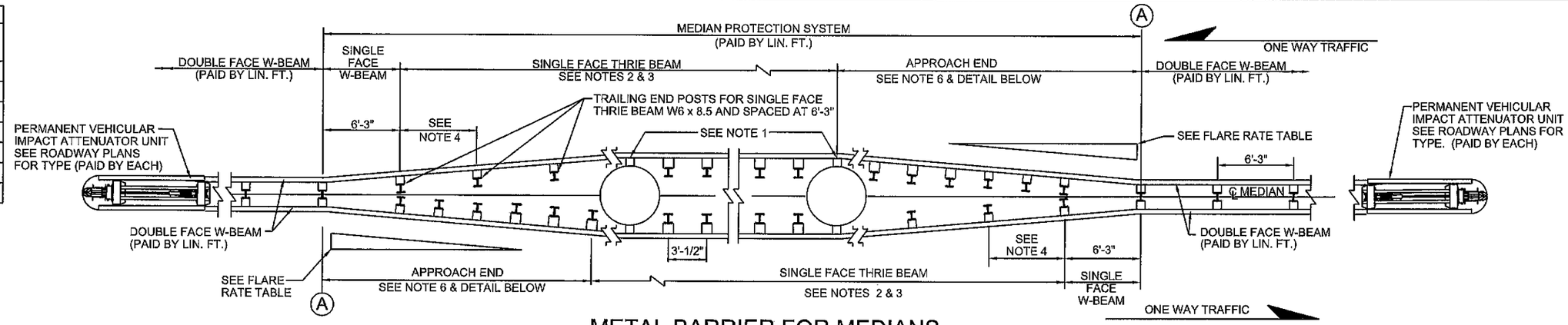

METAL BARRIER FOR MEDIANS

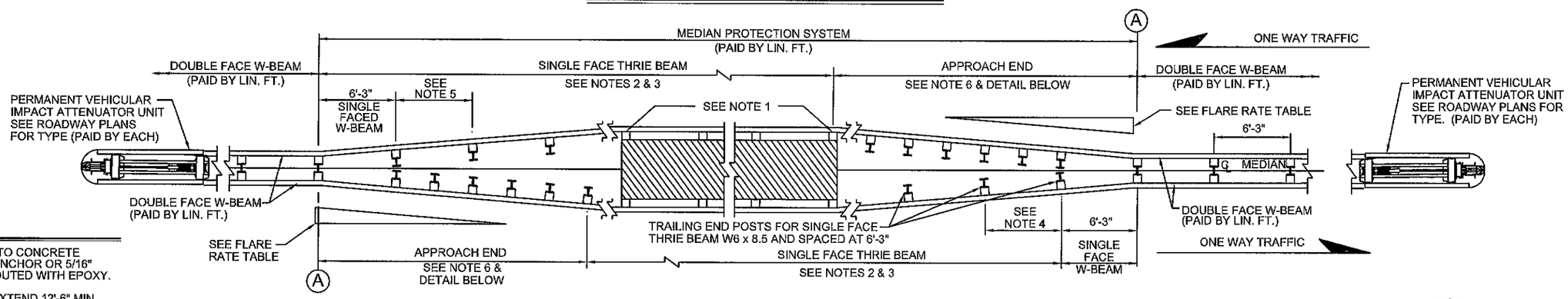

METAL BARRIER FOR MEDIANS

NOTES

1. ATTACH STANDARD OFFSET BLOCKS TO CONCRETE STRUCTURE WITH 5/16" EXPANSION ANCHOR OR 5/16" THREADED ROD IN A 1" X 8" HOLE GROUTED WITH EPOXY.
2. THE THRIE BEAM GUARDRAIL SHALL EXTEND 12'-6" MIN PAST THE STRUCTURE TO ALLOW INSTALLATION OF TRANSITION FOR THE OPPOSING TRAFFIC.
3. IF THE MINIMUM NUMBER OF 12'-6" THRIE BEAM SECTIONS REQUIRED TO SPAN THE STRUCTURE EXTENDS MORE THAN 6'-3" (BUT LESS THAN 12'-6") PAST THE STRUCTURE, THEN A 6'-3" SECTION OF NESTED THRIE BEAM SHOULD BE ADDED. OTHERWISE, INSTALL AN ADDITIONAL 12'-6" SECTION.
4. INDICATES THRIE BEAM GUARDRAIL REDUCER TRANSITION.
5. SOIL EMBANKMENT MATERIAL SHALL BE COMPACTED TO 95% OF MAXIMUM PROCTOR DENSITY, UNLESS OTHERWISE SPECIFIED IN THE PLANS. THE COST OF THE EMBANKMENT MATERIAL, FILL MATERIAL AROUND THE POST, GROUT MATERIAL FOR LEAVE OUTS AND THE PLACEMENT THEREOF SHALL BE INCLUDED IN THE UNIT BID PRICE FOR THE METAL BARRIER.
6. THIS TRANSITION SHALL END AT A W6 X 15 POST. PLACE NESTED THRIE BEAM WITH W6 X 15 POST AT 3'-1 1/2" MAX. SPACING BETWEEN THE END OF THE TRANSITION AND THE STRUCTURE.
7. SEE GUIDE FOR SELECTING , LOCATING AND DESIGNING TRAFFIC BARRIERS (CURRENT EDITION) TO DETERMINE PIER LOCATIONS THAT WARRANT BARRIERS.
8. METAL BARRIER TRANSITION SECTION AND NESTED THRIE BEAM SECTION SHALL BE INCLUDED IN THE LINEAR FEET OF THE PROTECTION SYSTEM.
9. FOR DETAILS OF W-BEAM GUARDRAIL SEE SHEET 606-GR31-1/20.
   FOR DETAILS OF THRIE BEAM GUARDRAIL SEE SHEET 606-GR31-2/20.
10. USE APPROPRIATE VEHICULAR IMPACT ATTENUATORS BASED ON THE ROADWAY POSTED SPEED AND MEDIAN WIDTH. FABRICATE AND INSTALL IN ACCORDANCE WITH MANUFACTURER'S SPECIFICATIONS.
11. PROTECTION SYSTEM SHALL BE MEASURED AND PAID BY LINEAR FEET AS MEASURED ALONG THE CENTERLINE.

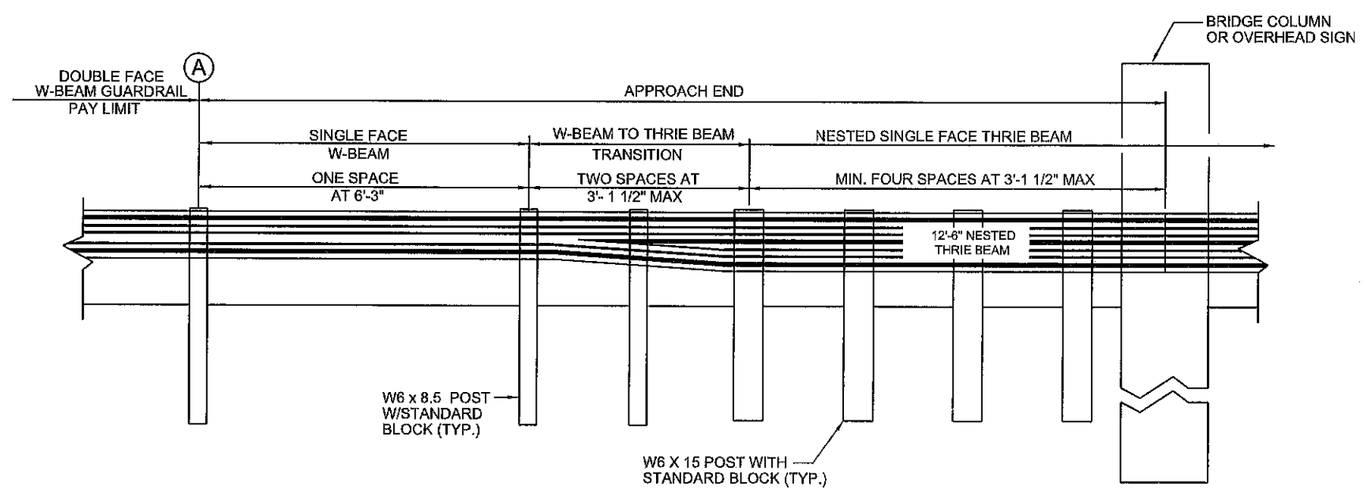

APPROACH END DETAIL

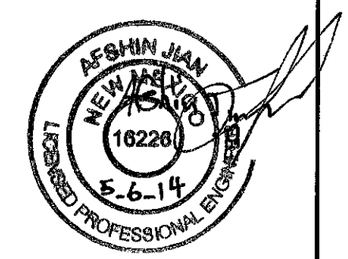

NO.	DATE	REV. BY	DESCRIPTION

REVISIONS (OR CHANGE NOTICES)

NEW MEXICO
DEPARTMENT OF TRANSPORTATION
STANDARD DRAWING

MEDIAN PROTECTION SYSTEM

APPROVED _____ DESIGN ENGINEER _____ DATE

606-GR31-15/20

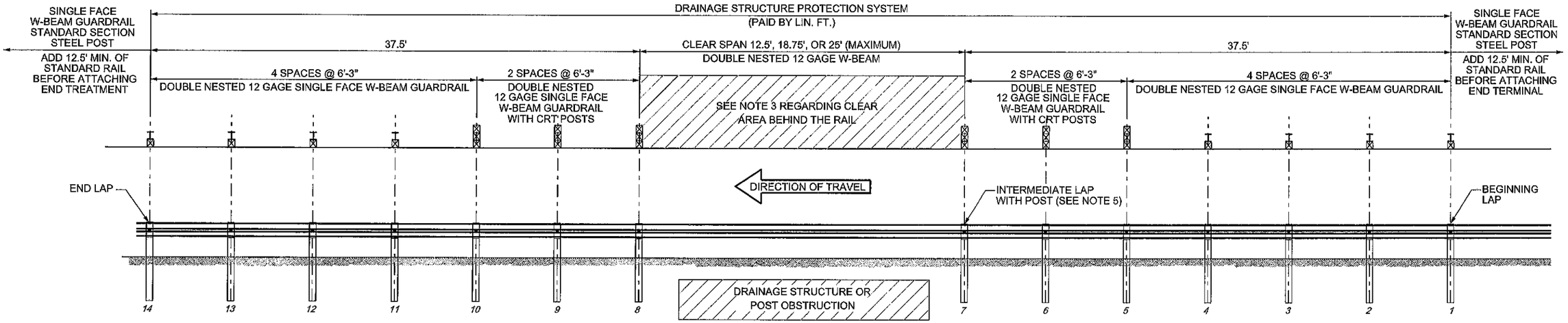

DRAINAGE STRUCTURE PROTECTION SYSTEM

(PAID BY LIN. FT.)

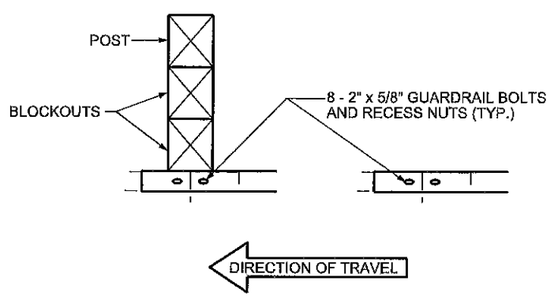

LAP SPLICES

SEE NOTE 4

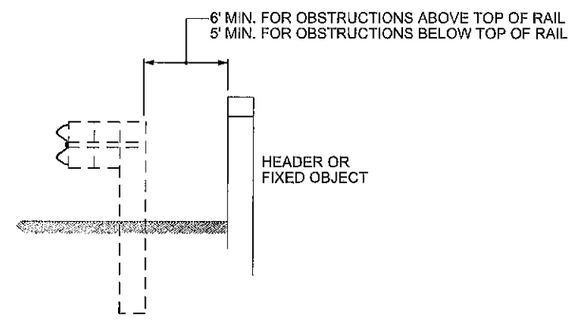

DYNAMIC DEFLECTION IN CLEAR SPAN AREA

SEE NOTE 3

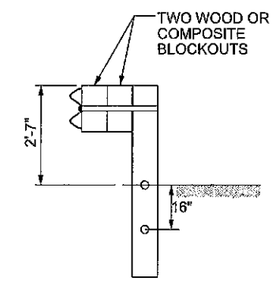

CRT WOOD POSTS

SEE NOTE 2

NOTES:

1. POSTS 1-4 AND 11-14 STANDARD STEEL POSTS WITH BLOCKOUTS. (SEE SHEET 606-GR31-1/20).
2. POSTS 5-10 ARE CRT WOOD POSTS WITH TWO WOOD OR COMPOSITE BLOCKOUTS. ONLY CRT POSTS SHALL BE WOOD.
3. CLEAR AREA BEHIND BACK OF RAIL SHALL BE:
   5 FEET MINIMUM FOR OBSTRUCTIONS LESS THAN OR EQUAL TO THE HEIGHT OF THE TOP OF RAIL.
   6 FEET MINIMUM FOR OBSTRUCTIONS TALLER THAN THE TOP OF RAIL.
4. LAP SPLICES IN THE DIRECTION OF ADJACENT TRAFFIC.
5. 25'-0" RAIL LENGTHS MAY BE USED TO ELIMINATE THE INTERMEDIATE LAP WITHOUT A POST. DO NOT PLACE A 25' RAIL WITHOUT A POST UNLESS NEEDED DUE TO THE LENGTH OF GAP.
6. DESIGN MUST MEET NCHRP 350 AND MASH TEST LEVEL 3 FHWA ACCEPTANCE.

NO.	DATE	REV. BY	DESCRIPTION

REVISIONS (OR CHANGE NOTICES)

NEW MEXICO
DEPARTMENT OF TRANSPORTATION
STANDARD DRAWING

DRAINAGE STRUCTURE PROTECTION SYSTEM

APPROVED _____ DESIGN ENGINEER _____ DATE

DRAWING SCALE = NOT TO SCALE

606-GR31-16/20

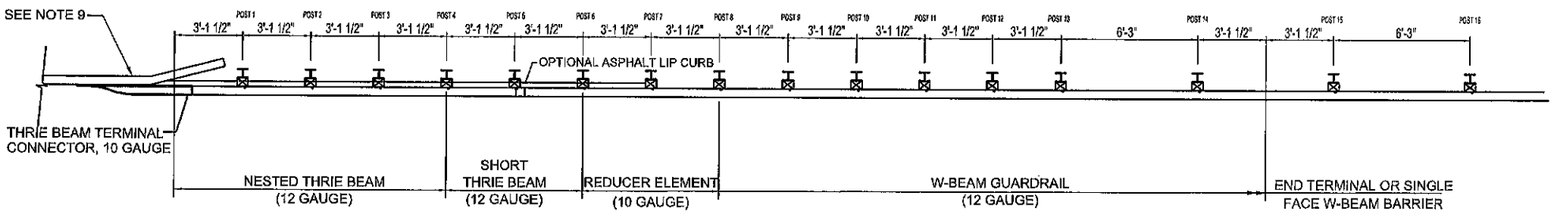

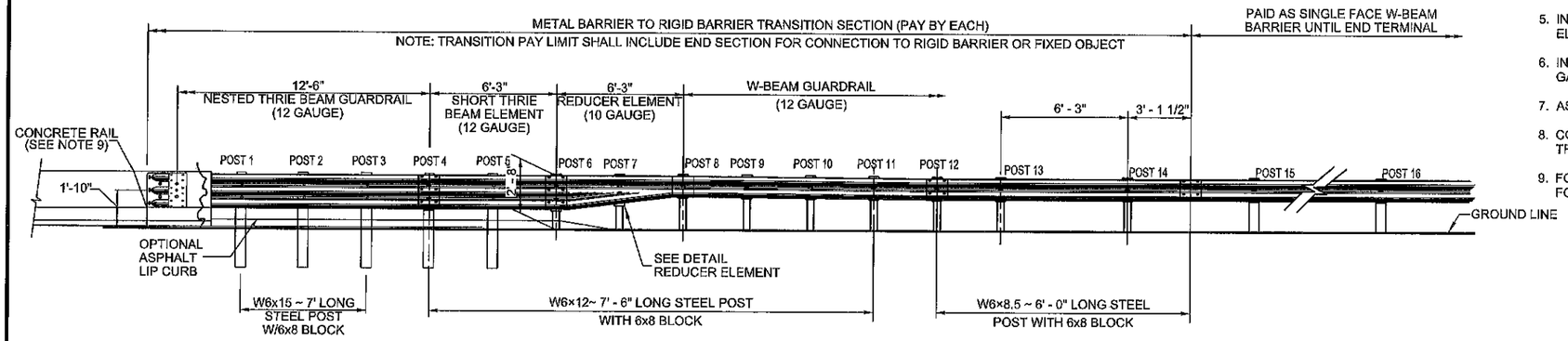

ELEVATION VIEW

NOTES:

1. ALL HARDWARE SHALL MEET FHWA CRASHWORTHINESS REQUIREMENTS AS PER NCHRP 350 AND MASH GUIDELINES AND SHALL BE ON THE DEPARTMENTS APPROVED PRODUCT LIST.
2. A MINIMUM OF FIVE 7/8" H.T.S. BOLTS ARE REQUIRED FOR THE ATTACHMENT OF THE THRIE BEAM TERMINAL CONNECTOR TO THE CONCRETE BARRIER WITH THIN SLAB FERRULE INSERTS OR RESIN BONDED ANCHORS. LENGTH TO BE AS NEEDED FOR PROPER ATTACHMENT AS DETERMINED IN THE FIELD BY THE PROJECT MANAGER. HOLES FOR BOLTS SHALL BE 1" DIA. AND SHALL BE EITHER FORMED OR CORE DRILLED IN A MANNER THAT DOES NOT DISTURB CONCRETE BARRIER STEEL REINFORCEMENT.
3. FURNISHING AND PLACING OF BOLTS, WASHERS, AND BEARING PLATE SHALL BE CONSIDERED INCIDENTAL TO THE COST OF METAL BARRIER.
4. INSTALL THRIE BEAM TERMINAL CONNECTOR BETWEEN NESTED GUARDRAIL ELEMENTS ON THE APPROACH SECTION.
5. INSTALL THRIE BEAM TERMINAL CONNECTOR OUTSIDE OF THE NESTED GUARDRAIL ELEMENTS ON THE APPROACH SECTION.
6. IN CASES WHERE END SECTION IS PLACED ON THE OUTSIDE OF THE GUARDRAIL, INSTALL A GALVANIZED 1" ID, 2" OD, 0.134" THICK FLAT WASHER UNDER SPLICE BOLT HEADS.
7. ASPHALT LIP CURB, IF SPECIFIED, SHALL BE CONSIDERED INCIDENTAL TO THE TRANSITION.
8. CONSTRUCTION OF LEAVEOUTS AND MOW STRIP SHALL BE CONSIDERED INCIDENTAL TO THE TRANSITION.
9. FOR 32" BRIDGE BARRIER CONNECTION, REFER TO STANDARD DRAWING 514-01-4/6 FOR DETAILS. FOR 42" BRIDGE BARRIER CONNECTION, REFER TO STANDARD DRAWING 514-03-4/6 FOR DETAILS.

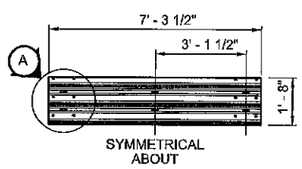

SHORT THRIE BEAM ELEMENT

LEFT
(MIRROR OF RIGHT)

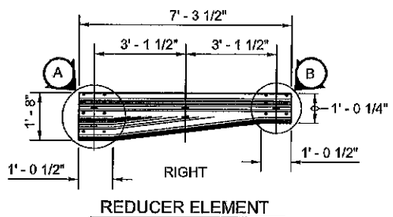

REDUCER ELEMENT
(REDUCER ELEMENT TO BE PAID AS LIN. FT. OF THRIE BEAM)

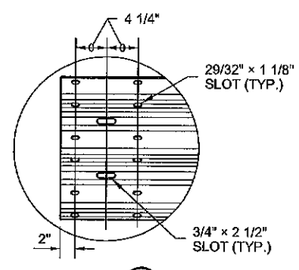

DETAIL A

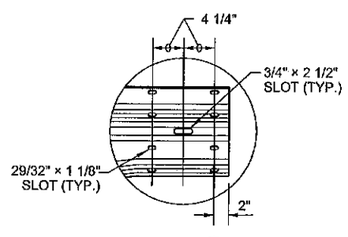

DETAIL B

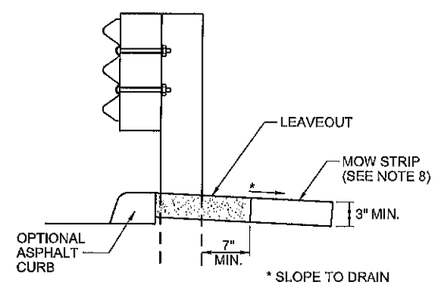

CURB OPTION (A)
THIS OPTION WILL INCREASE THE POST EMBEDMENT THROUGHOUT THE SYSTEM

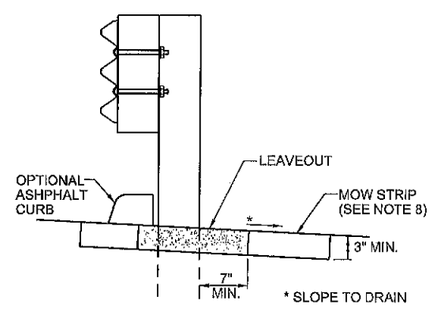

CURB OPTION (B)
CURB SHOWN ON TOP OF MOW STRIP

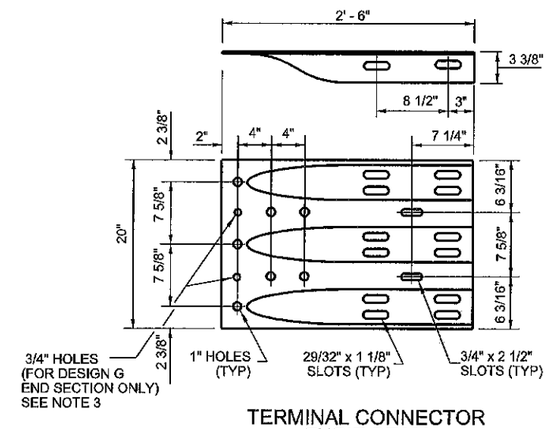

TERMINAL CONNECTOR THRIE BEAM

NO.	DATE	REV. BY	DESCRIPTION

REVISIONS (OR CHANGE NOTICES)

NEW MEXICO
DEPARTMENT OF TRANSPORTATION
STANDARD DRAWING

TRANSITION - METAL BARRIER
TO RIGID BARRIER

APPROVED _____ DESIGN ENGINEER — 11/05/13 DATE

606-GR31-17/20

DRAWING SCALE = NOT TO SCALE

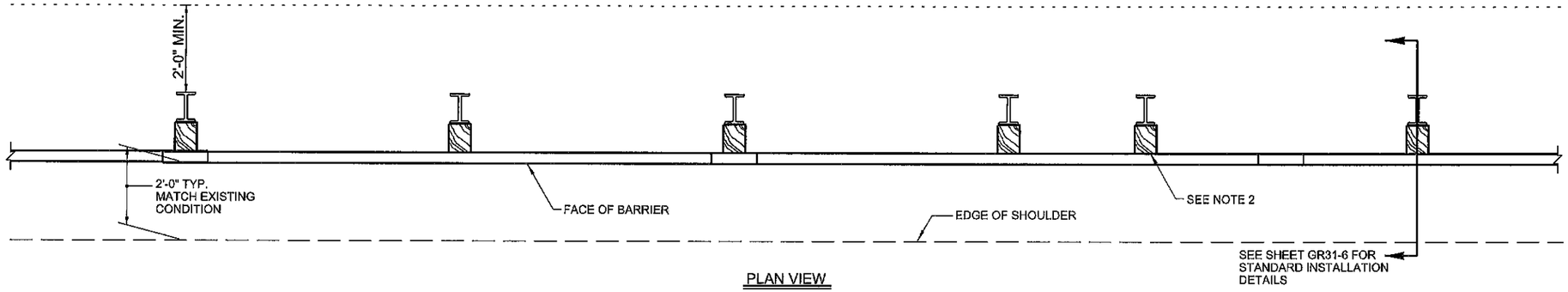

PLAN VIEW

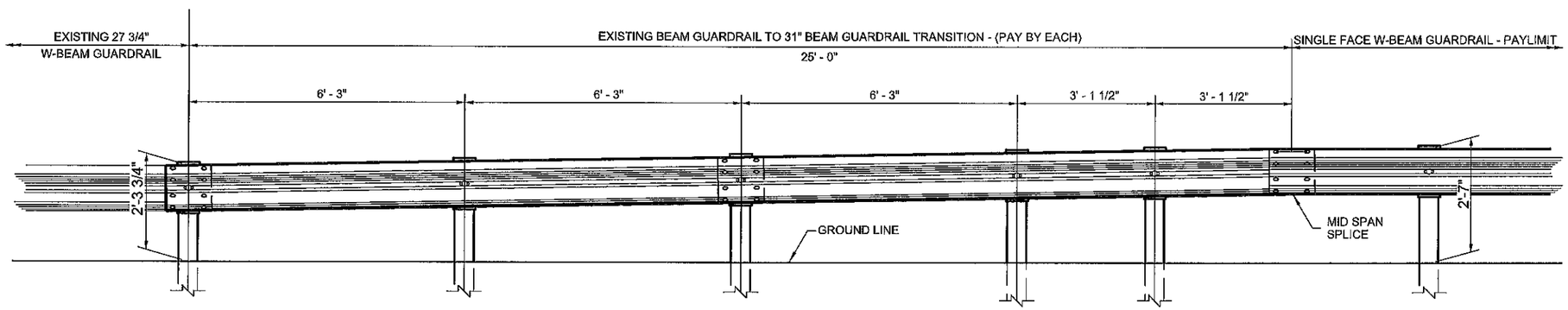

ELEVATION VIEW ~ PROFILE TAPER

NOTES:

1. REFER TO SHEET 606-GR31-1/20 AND 606-GR31-2/20 FOR COMPONENT DETAILS FOR SINGLE FACE W-BEAM GUARDRAIL NOT SHOWN ON THIS PLAN.
2. SPACER BLOCKS MAY CONSIST OF WOOD, PLASTIC, OR COMPOSITE MATERIAL ON THE APPROVED PRODUCTS LIST.

AFSHIN JIAN
NEW MEXICO
16226
5-6-14
LICENSED PROFESSIONAL ENGINEER

NO.	DATE	REV. BY	DESCRIPTION

REVISIONS (OR CHANGE NOTICES)

NEW MEXICO
DEPARTMENT OF TRANSPORTATION
STANDARD DRAWING

EXISTING BEAM GUARDRAIL TO
31" BEAM GUARDRAIL
TRANSITION

APPROVED _____ DESIGN ENGINEER _____ DATE

DRAWING SCALE = NOT TO SCALE

606-GR31-18/20

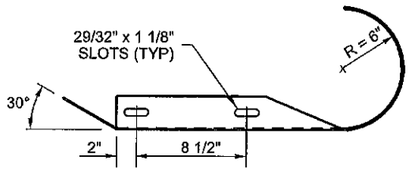

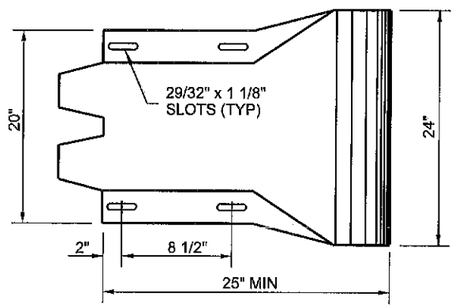

DESIGN C (THRIE BEAM)

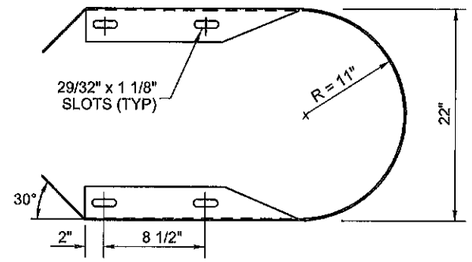

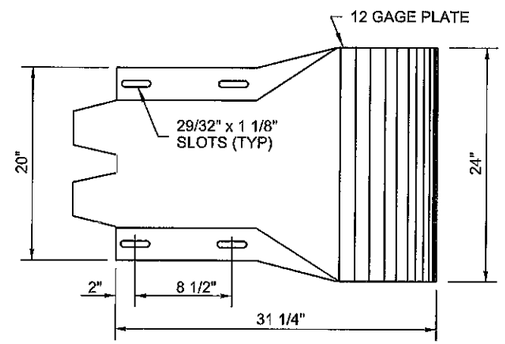

DESIGN D (THRIE BEAM)

NOTES:

1. IN CASES WHERE DESIGN F END SECTION IS LAPPED ON THE OUTSIDE OF THE GUARDRAIL, A GALVANIZED 1" ID, 2" OD, 0.134" THICK, NARROW TYPE A PLAIN WASHER OR AN ANCHOR RAIL WASHER WILL BE PLACED UNDER THE SPLICE BOLT HEADS.
2. ATTACH GUARDRAIL TO BRIDGE RAIL OR CONCRETE BARRIER WITH 7/8" DIAMETER BOLTS (FIVE MINIMUM) WITH THIN SLAB FERRULE INSERTS OR RESIN BONDED ANCHORS. SEE THE CONTRACT PLANS.

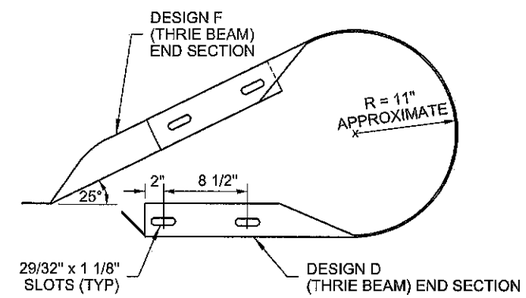

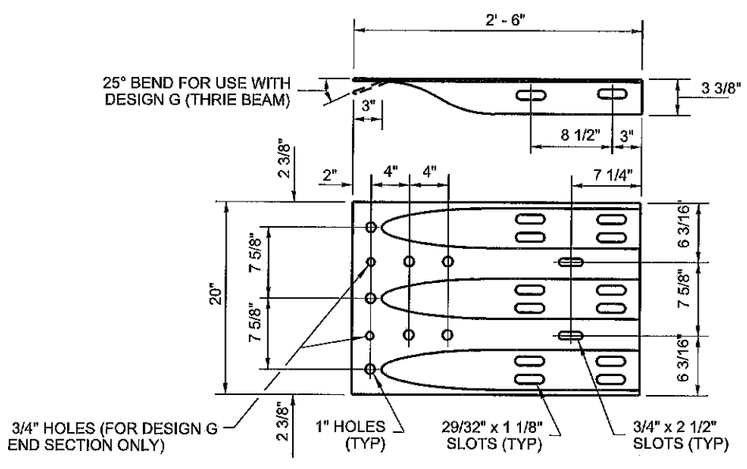

DESIGN F (THRIE BEAM)

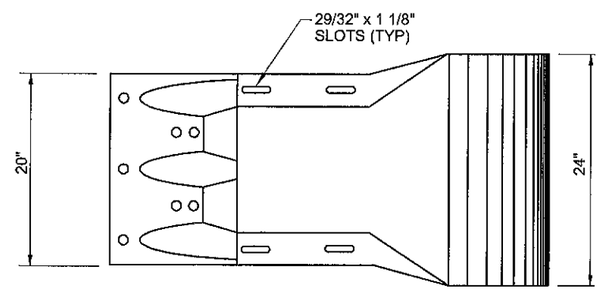

DESIGN G (THRIE BEAM)

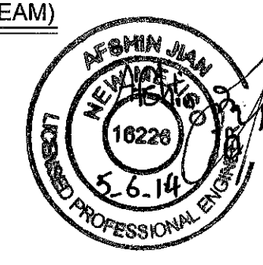

NO.	DATE	REV. BY	DESCRIPTION

REVISIONS (OR CHANGE NOTICES)

NEW MEXICO
DEPARTMENT OF TRANSPORTATION
STANDARD DRAWING

THRIE BEAM GUARDRAIL
END SECTIONS

APPROVED _____ DESIGN ENGINEER _____ DATE

606-GR31-19/20

DRAWING SCALE = NOT TO SCALE

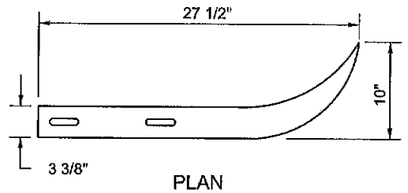

PLAN

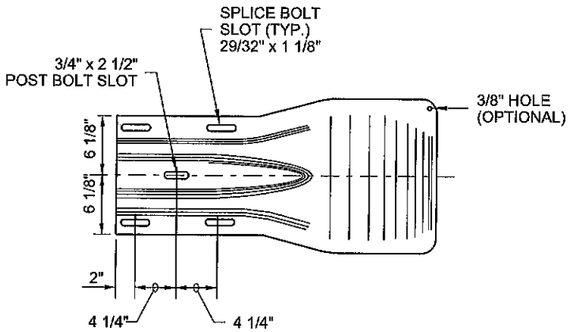

ELEVATION

DESIGN A

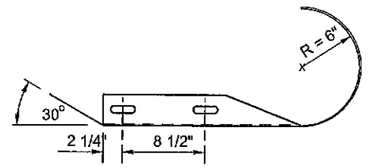

PLAN

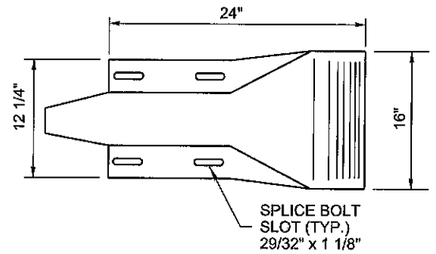

ELEVATION

DESIGN C

NOTES:

1. END SECTION DESIGN C SHALL BE USED EXCEPT WHERE NOTED ON THE PLANS OR CONTRACT.
2. ATTACH GUARDRAIL TO BRIDGE RAIL OR CONCRETE BARRIER WITH 7/8" DIAMETER BOLTS (FIVE MINIMUM) WITH THIN SLAB FERRULE INSERTS OR RESIN BONDED ANCHORS. SEE THE CONTRACT PLANS.
3. A SINGLE PIECE HAVING SIMILAR DIMENSIONAL SHAPE TO DESIGN G AND MATING WITH THE W-BEAM GUARDRAIL IS AN ACCEPTABLE ALTERNATE.
4. IN CASES WHERE DESIGN "F" END SECTION IS LAPPED ON THE OUTSIDE OF THE GUARDRAIL, A GALVANIZED 1" ID, 2" OD, 0.134" THICK, NARROW TYPE A PLAIN WASHER OR AN ANCHOR RAIL WASHER SHALL BE PLACED UNDER THE SPLICE BOLT HEADS.

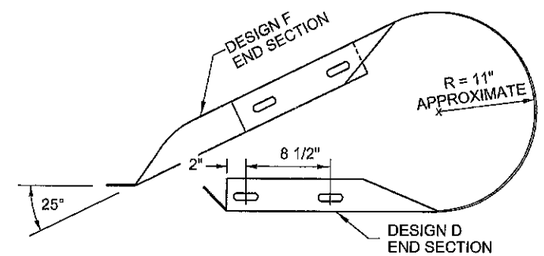

PLAN

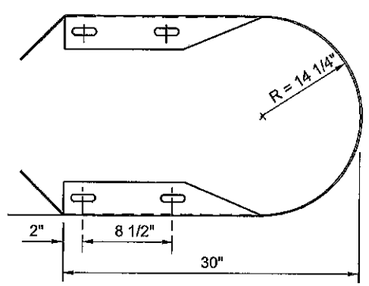

PLAN

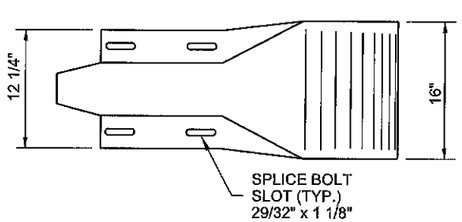

ELEVATION

DESIGN D

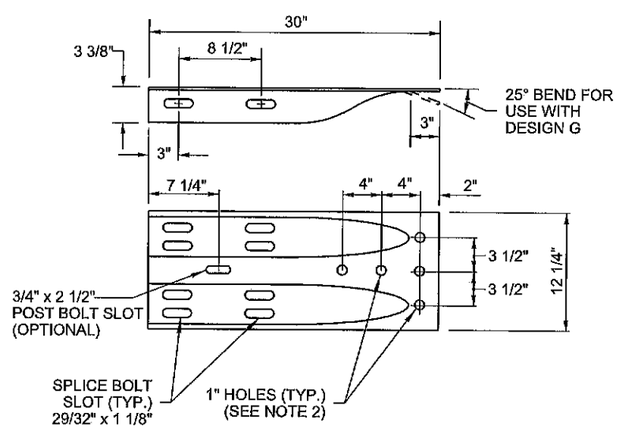

ELEVATION

DESIGN F

(SEE NOTE 4)

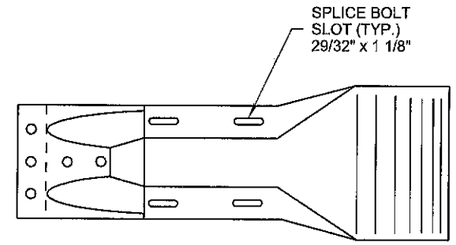

ELEVATION

DESIGN G

(SEE NOTE 3)

NO.	DATE	REV. BY	DESCRIPTION

REVISIONS (OR CHANGE NOTICES)

NEW MEXICO
DEPARTMENT OF TRANSPORTATION
STANDARD DRAWING

W-BEAM GUARDRAIL
END SECTIONS

APPROVED _____ DESIGN ENGINEER _____ DATE

606-GR31-20/20

DRAWING SCALE = NOT TO SCALE

SINGLE POST INSTALLATION

(TOTAL SIGN AREA NOT TO EXCEED 10.5 SQ. FT.)

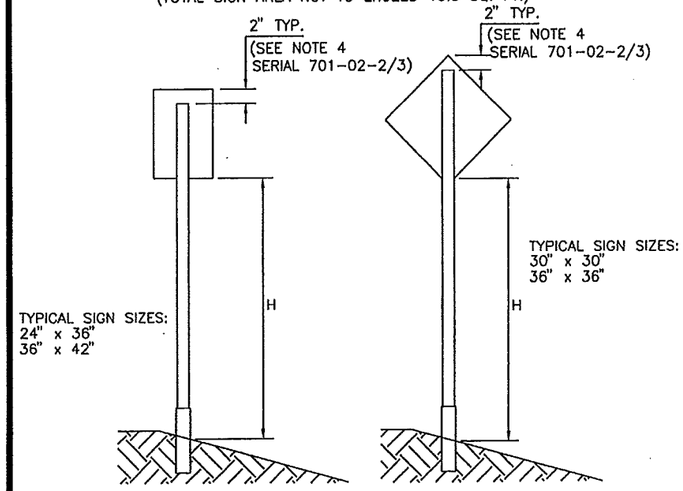

SIGN POST REQUIREMENTS

(SEE NOTES 1 & 3, SHT. 701-02-2/3)

POST TYPE	POST SIZE	MAX. CLEAR HEIGHT, H (FT.)	MAX. SIGN AREA (SQ. FT.)
SQUARE TUBING	1.75" X 1.75" (12 GA.)	9	5
SQUARE TUBING	1.75" X 1.75" (12 GA.)	8	6
SQUARE TUBING	1.75" X 1.75" (12 GA.)	7	7
SQUARE TUBING	2.00" X 2.00" (12 GA.)	9	8
SQUARE TUBING	2.00" X 2.00" (12 GA.)	8	9
SQUARE TUBING	2.00" X 2.00" (12 GA.)	7	10
SQUARE TUBING	2.25" X 2.25" (12 GA.)	9	10.5
SQUARE TUBING	2.25" X 2.25" (12 GA.)	10	10.5

DOUBLE POST INSTALLATION

(TOTAL SIGN AREA NOT TO EXCEED 30 SQ. FT.)
(EXCEPT FOR SLIP BASE SYSTEMS.)

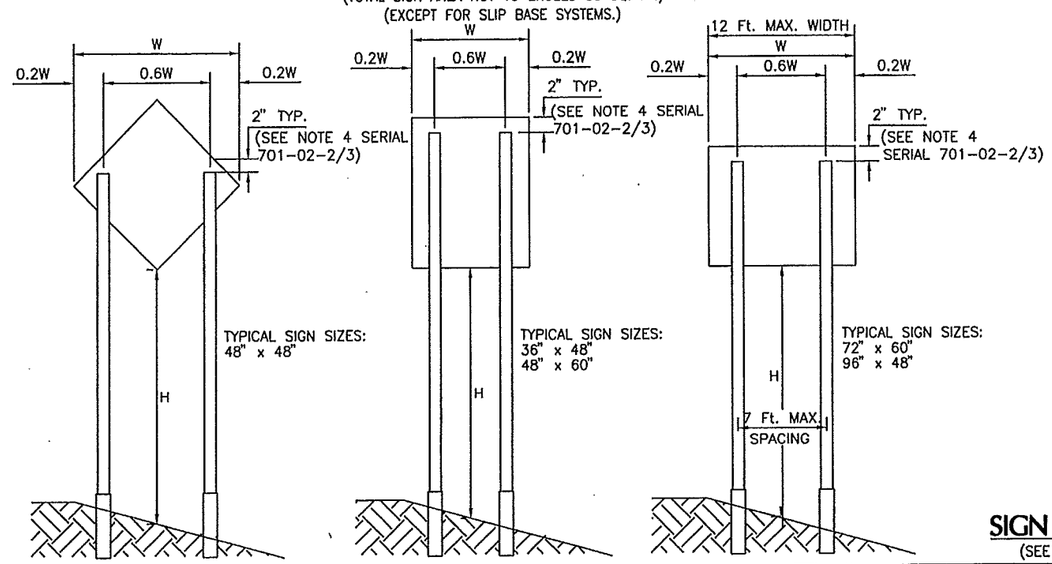

* APPROVED SLIP BASE REQUIRED WITH THIS INSTALLATION
SEE MULTI-DIRECTIONAL SLIP BASE
ASSEMBLY DETAILS (SERIAL 701-02-3/3)
SEE NOTE 12 SERIAL (701-02-2/3)

SIGN POST REQUIREMENTS

(SEE NOTES 1 & 2, SERIAL 701-02-2/3)

POST TYPE	POST SIZE	MAX. CLEAR HEIGHT, H (FT.)	MAX. SIGN AREA (SQ. FT.)
SQUARE TUBING	2.00" X 2.00" (12 GA.)	11	13
SQUARE TUBING	2.00" X 2.00" (12 GA.)	9	15
SQUARE TUBING	2.00" X 2.00" (12 GA.)	8	16
SQUARE TUBING	2.25" X 2.25" (12 GA.)	7	20
* U-CHANNEL	4 LB./FT.	11	25
* U-CHANNEL	4 LB./FT.	9	30
* SQUARE TUBING	2.50" X 2.50" (10 GA.)	7	36

TRIPLE POST INSTALLATION

(TOTAL SIGN AREA NOT TO EXCEED 50 SQ. FT.)

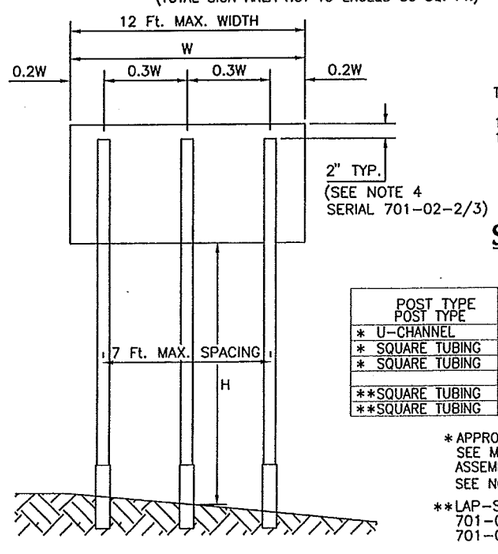

TYPICAL SIGN SIZES:
96" x 60"
108" x 60"
120" x 60"

SIGN POST REQUIREMENTS

(SEE NOTES 1 & 2, SERIAL 701-02-2/3)

POST TYPE POST TYPE	POST SIZE	MAX. CLEAR HEIGHT, H (FT.)	MAX. SIGN AREA (SQ. FT.)
* U-CHANNEL	4 LB./FT.	11	36
* SQUARE TUBING	2.50" X 2.50" (10 GA.)	9	45
* SQUARE TUBING	2.50" X 2.50" (10 GA.)	7	50
**SQUARE TUBING	2.50" X 2.50" (10 GA.)	11	36
**SQUARE TUBING	2.50" X 2.50" (10 GA.)	9	45

* APPROVED SLIP BASE REQUIRED WITH THIS INSTALLATION
SEE MULTI-DIRECTIONAL SLIP BASE
ASSEMBLY DETAILS (SERIAL 701-02-3/3)
SEE NOTE 12 SERIAL (701-02-2/3)

**LAP-SPLICE OR MULTI-DIRECTIONAL SLIP BASE (SERIAL 701-02-3/3 MAY BE USED. SEE NOTE 12 (SERIAL 701-02-2/3.)

BASE POST INSTALLATION DETAILS FOR SQUARE TUBING AND U-CHANNEL SYSTEMS

(SEE SERIAL. 701-02-3/3 FOR MULTI-DIRECTIONAL SLIP BASE SYSTEMS)

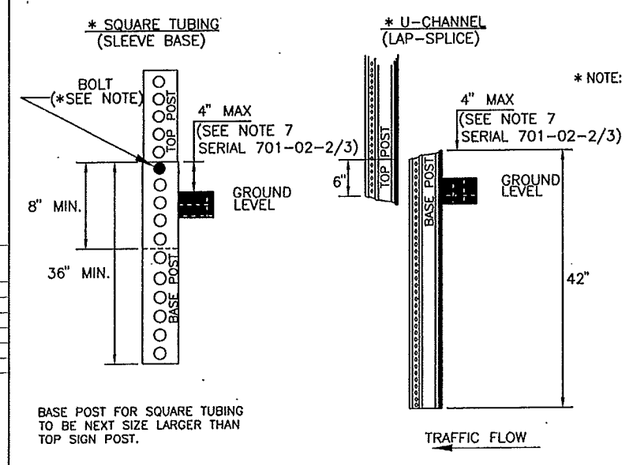

BASE POST FOR SQUARE TUBING
TO BE NEXT SIZE LARGER THAN
TOP SIGN POST.

* NOTE: SEE MANUFACTURER'S DRAWINGS FOR SPECIFIC ASSEMBLY INFORMATION (POST TO BASE POST OVERLAP), INCLUDING TYPES OF NUTS, BOLTS, WASHERS, AND OTHER PARTS REQUIRED FOR PRODUCT USE.

NO.	DATE	REV. BY	DESCRIPTION

REVISIONS (OR CHANGE NOTICES)

NEW MEXICO
DEPARTMENT OF TRANSPORTATION
STANDARD DRAWING

SMALL SIGN SUPPORT
INSTALLATION DETAILS

APPROVED _____ DESIGN ENGINEER 1-11-05 DATE

DESIGNED BY___ DRAWN BY ___ CHECKED BY ___

701-02-1/3 SHEET 1 OF 3

HORIZONTAL AND VERTICAL CLEARANCES

(SEE NOTE 9)

FREEWAYS/EXPRESSWAYS & RURAL AREAS

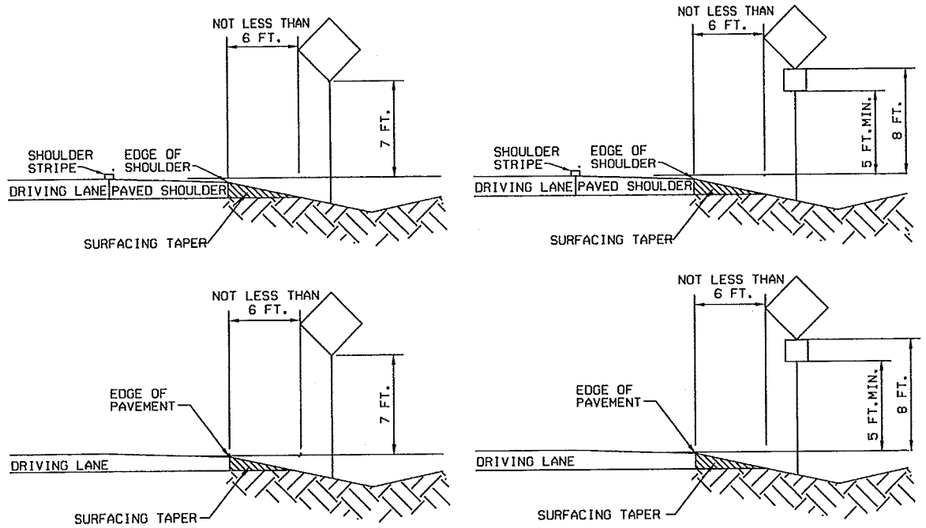

URBAN (BUSINESS, COMMERCIAL, & RESIDENTIAL AREAS)
CONSTRUCTION ZONES IN URBAN AREAS

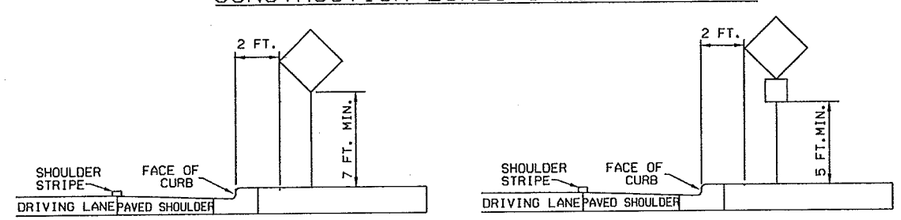

CONSTRUCTION ZONES IN FREEWAYS/EXPRESSWAYS AND RURAL AREAS

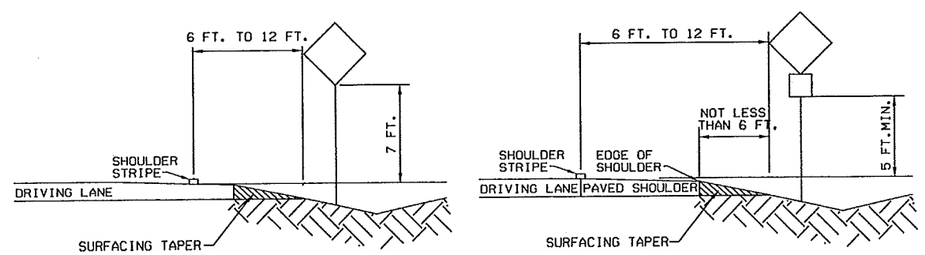

GENERAL NOTES:

1. ALL SQUARE TUBING SIGN POST REQUIREMENTS ARE BASED ON A 10 OR 12 GAUGE THICKNESS, ASTM A570 GRADE 50 STEEL, A MINIMUM YIELD STRENGTH OF 60,000 PSI AND A 70 MPH WIND LOAD. ALL U-CHANNEL SIGN POSTS REQUIREMENTS ARE BASED ON A MINIMUM YIELD STRENGTH OF 80,000 PSI AND 85 MPH WIND LOAD. SEE THE MUTCD & STANDARD HIGHWAY SIGNS MANUAL (CURRENT EDITION) FOR FURTHER GUIDANCE.
2. FOR CONSTRUCTION SIGNING & PERMANENT SINGLE AND TRIPLE POST INSTALLATIONS, SMALLER POST CROSS SECTIONS MAY BE USED IN ACCORDANCE WITH MANUFACTURER'S RECOMMENDATIONS AND THE RECOMMENDATIONS DETAILED IN NOTE 1.
3. TOP EDGE OF POSTS SHALL NOT EXTEND PAST TOP EDGE OF SIGN.
4. STEEL POSTS, BASE POSTS, AND SLIP BASES FOR ALUMINUM PANEL SIGNS SHALL BE SELECTED FROM THE DEPARTMENT'S APPROVED PRODUCT LIST. ALL SIGNS MOUNTED WITHIIN THE CLEAR ZONE SHALL BE MOUNTED ON A NCHRP REPORT 350 APPROVED SIGN POST/BASE POST BREAKAWAY SYSTEM UNLESS INSTALLATION IS LOCATED BEHIND A NON-GATING LONGITUDINAL BARRIER. OTHER INSTALLATIONS, CONFIGURATIONS OR SYSTEMS NOT SHOWN MAY BE USED AS RECOMMENDED BY THE MANUFACTURER WITH APPROVAL OF THE DISTRICT TRAFFIC ENGINEER.
5. FOR INSTALLATIONS ON WEAK (SOFT) SOIL, SOIL PLATES SHALL BE USED AS RECOMMENDED BY THE MANUFACTURER. PAYMENT FOR SOIL PLATES SHALL BE INCIDENTAL TO THE SIGN INSTALLATION.
6. BASE POSTS SHALL NOT EXTEND MORE THAN 4" ABOVE GROUND LEVEL AND SHALL BE OF THE SAME WEIGHT/GAUGE AND TYPE AS THE SIGN POST.
7. INTERMIXING OF U-CHANNEL AND SQUARE TUBING POSTS, POSTS OF DIFFERENT WEIGHTS/GAUGES OR PRODUCT BRANDS IS NOT ALLOWED EXCEPT WHERE RECOMMENDED BY THE MANUFACTURER.
8. HORIZONTAL CLEARANCES APPLY TO INSTALLATIONS ON LEFT AND RIGHT SIDE OF ROADWAY.
9. SUPPLEMENTAL SIGNS SHALL NOT BE ATTACHED DIRECTLY TO PRIMARY PANELS ON EITHER PERMANENT OR CONSTRUCTION SIGNING INSTALLATIONS.
10. SPACING BETWEEN SUPPLEMENTAL PANELS AND PRIMARY PANELS SHALL NOT EXCEED 6".
11. SIGN PANELS PLACED PARALLEL TO TRAFFIC SHALL BE MOUNTED ON A MULTI-DIRECTIONAL BREAKAWAY SYSTEM. (SEE SERIAL 701-02-3/3)

NO.	DATE	REV. BY	DESCRIPTION
REVISIONS (OR CHANGE NOTICES)			

NEW MEXICO
DEPARTMENT OF TRANSPORTATION
STANDARD DRAWING

SMALL SIGN SUPPORT
INSTALLATION DETAILS

APPROVED _____ DESIGN ENGINEER 2-3-02 DATE

DESIGNED BY___ DRAWN BY___ CHECKED BY___

701-02-2/3 SHEET 2 OF 3

MULTI-DIRECTIONAL SLIP BASE DETAILS

SEE APPROVED PRODUCT LIST FOR APPROVED EQUALS.

SQUARE TUBING SLIP BASE

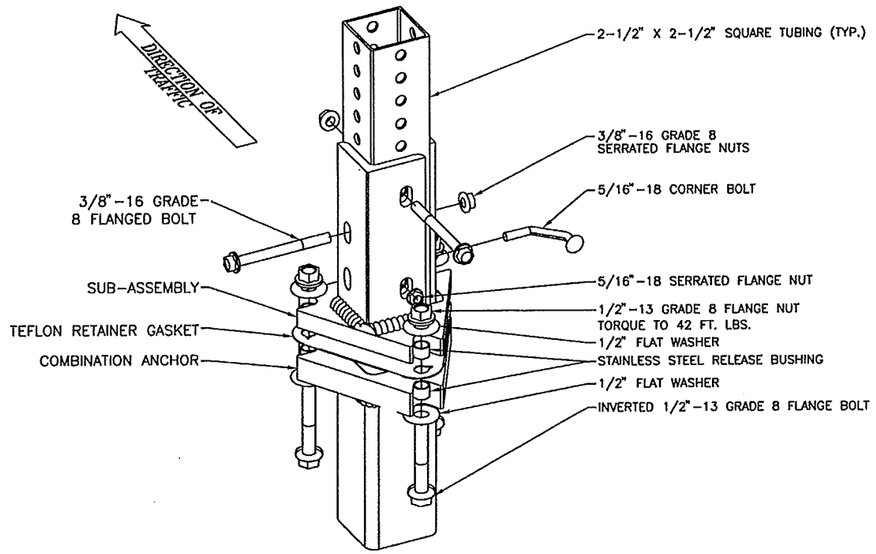

DETAIL "A"-CONCRETE ANCHOR

(NOT TO EXCEED 4" ABOVE GROUND LEVEL)

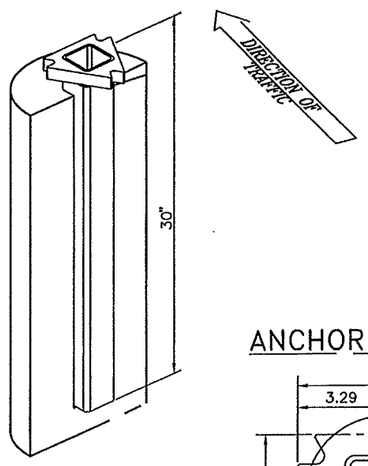

DETAIL "B"-SOIL ANCHOR

(NOT TO EXCEED 4" ABOVE GROUND LEVEL)

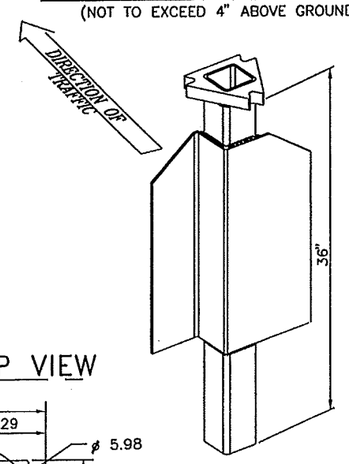

NOTES:

1. CONCRETE SHOULD BE A MINIMUM OF 12" IN DIAMETER AND 30" DEEP.
2. CLASS "A" CONCRETE SHALL BE USED. THE COST SHALL BE INCIDENTAL TO THE PRICE OF STEEL POSTS & BASE POSTS FOR ALUMINUM PANEL SIGNS.

ANCHOR TOP VIEW

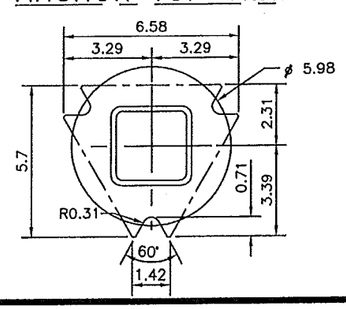

U-CHANNEL SLIP BASE

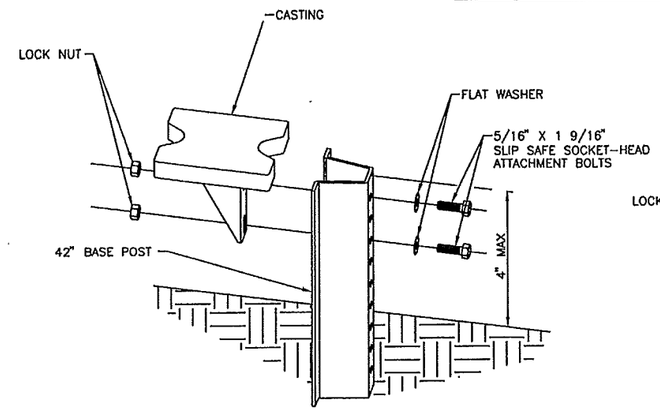

NOTE: BOLTS SHOULD BE TIGHTENED 1/2 TO 3/4 TURN AFTER SNUG.

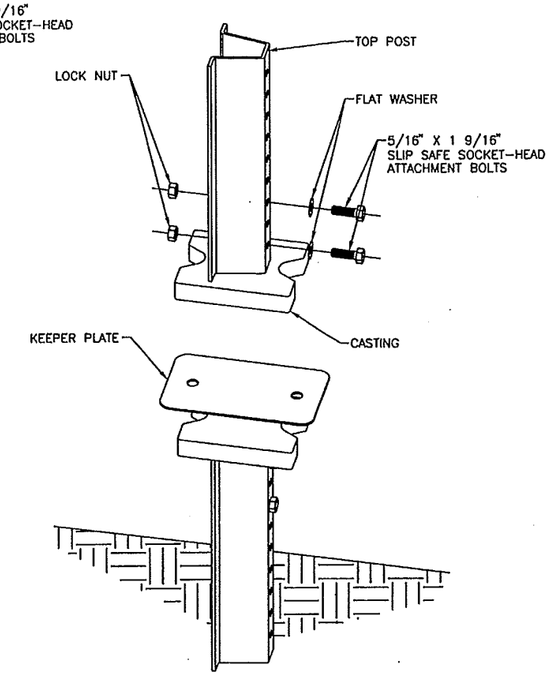

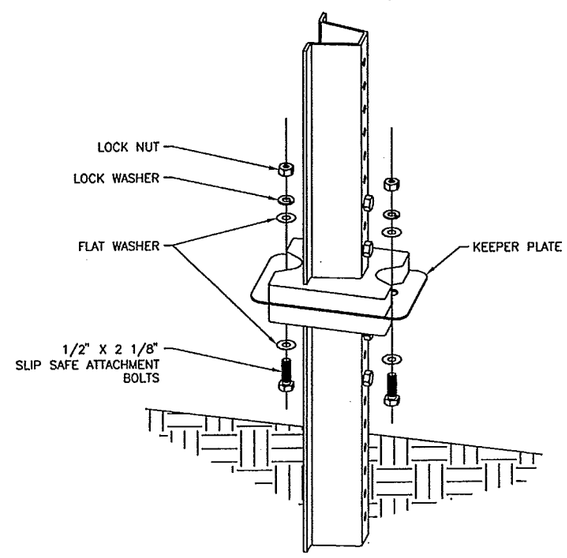

NOTE: TIGHTEN NUT 1/3 TO 1/2 TURN AFTER SNUG.

NO.	DATE	REV. BY	DESCRIPTION

REVISIONS (OR CHANGE NOTICES)

NEW MEXICO DEPARTMENT OF TRANSPORTATION STANDARD DRAWING

MULTI-DIRECTIONAL SLIP BASE POST DETAILS

APPROVED _____ DESIGN ENGINEER _____ 1-11-05 DATE

DESIGNED BY___ DRAWN BY ___ CHECKED BY ___

701-02-3/3 SHEET 3 OF 3

TYPICAL
(SEE NOTES)

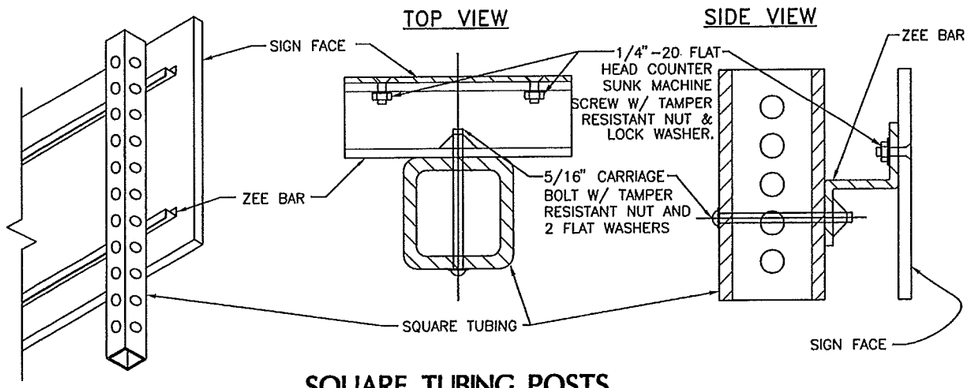

SQUARE TUBING POSTS

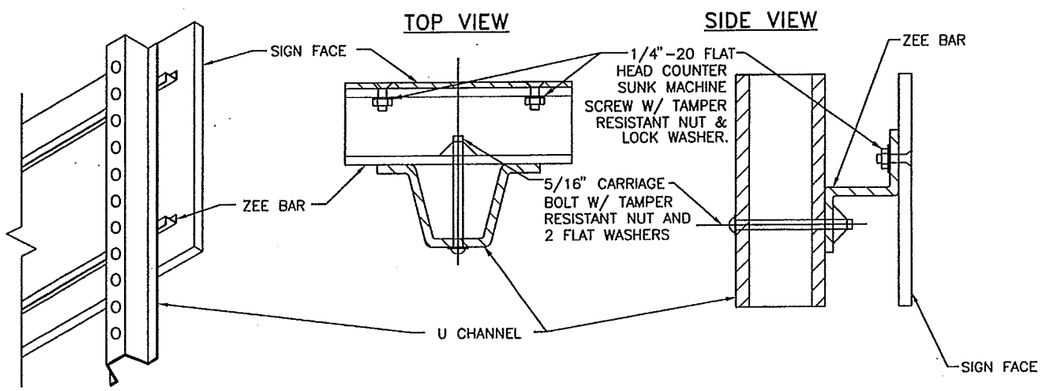

U CHANNEL SUPPORT POSTS

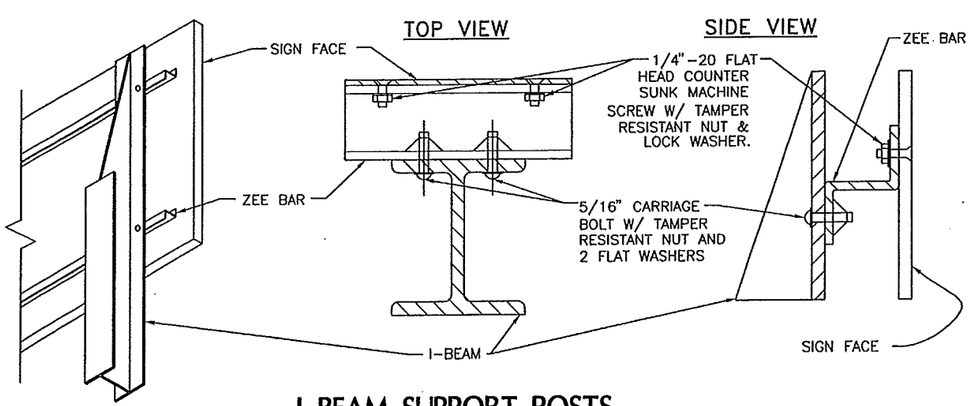

I-BEAM SUPPORT POSTS

ALTERNATE
(SEE NOTES)

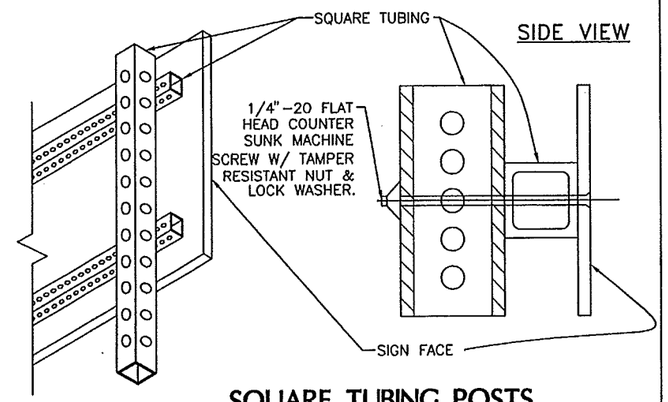

SQUARE TUBING POSTS

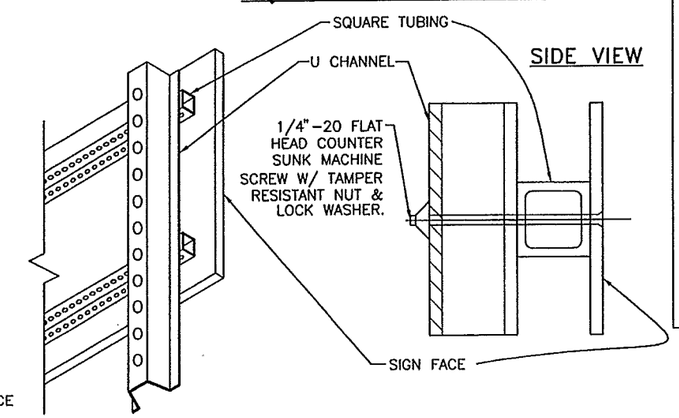

U CHANNEL SUPPORT POSTS

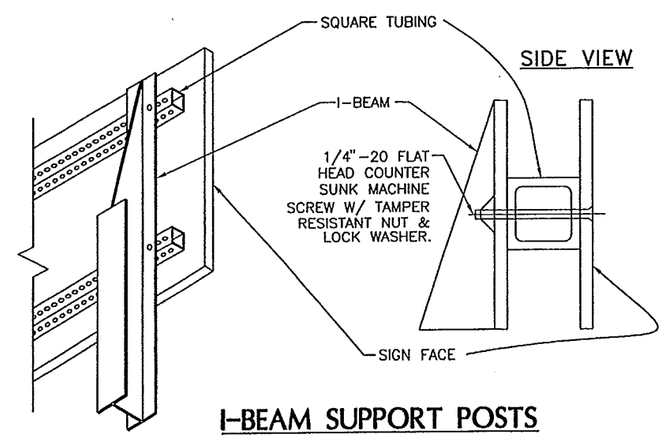

I-BEAM SUPPORT POSTS

GENERAL NOTES:

1. BACKING ZEE SHALL BE ALUMINUM ALLOY 6061-T6. EACH ZEE SHALL BE PROVIDED WITH A 9/16" X 2" HORIZONTAL SLOT FOR EACH POST MOUNTING BOLT.
2. BACKING ZEE SHALL BE FASTENED TO THE SIGN BLANK WITH 1/4" - 20 X 3/4" FLAT HEAD COUNTER SUNK MACHINE SCREWS WITH NUT AND LOCK WASHER (CADMIUM OR GALVANIZED OR 2024-T4 ALUMINUM-ALLOY) FASTENERS AT 9" +/- 1/2" INTERVALS.
3. BACKING ZEE WITH SIGN FACES SHALL BE FASTENED TO THE SIGN SUPPORT POST WITH 5/16" CARRIAGE BOLT, TAMPER RESISTANT NUT & TWO WASHERS GALVANIZED OR CADMIUM PLATED TO ASTM B-766 SPECIFICATION.
4. BACKING ZEE IS NOT NEEDED WHERE SIGN IS TO BE MOUNTED ON ONE POST AND IS APPROXIMATELY TEN AND A HALF (10.5) SQUARE FEET OR LESS.
5. ALTERNATE BACKING MAY BE 1-1/2" PERFORATED SQUARE TUBING AND ASSOCIATED HARDWARE, DESCRIBED IN SERIAL 701-02-1/2 AND 701-02-2/2
6. ALUMINUM PANEL SIGNS UNDER 24" IN WIDTH SHALL BE 0.08" MINIMUM THICKNESS 6061-T6 OR 5052-H38 ALUMINUM ALLOY. ALUMINUM PANEL SIGNS 24" AND OVER IN WIDTH SHALL BE SINGLE SHEET 6061-T6 OR 5052-H38 ALUMINUM ALLOY 1/8" MININUM THICKNESS.
7. BACKING ZEES SHALL BE 3" X 2-3/4" X 1/4" AT 2.33 LBS. PER FT. FOR 6061-T6 ALUMINUM.
8. EXPOSED BOLT HEADS ON THE FACE OF THE SIGN SHALL BE COLORED AND REFLECTORIZED TO MATCH THE SURROUNDING COLOR.

NO.	DATE	REV. BY	DESCRIPTION

REVISIONS (OR CHANGE NOTICES)

NEW MEXICO DEPARTMENT OF TRANSPORTATION STANDARD DRAWING

ALUMINUM SIGN PANEL DETAILS

APPROVED _____ DESIGN ENGINEER _____ DATE

DESIGNED BY___ DRAWN BY ___ CHECKED BY ___

701-03-1/2 SHEET 1 OF 2

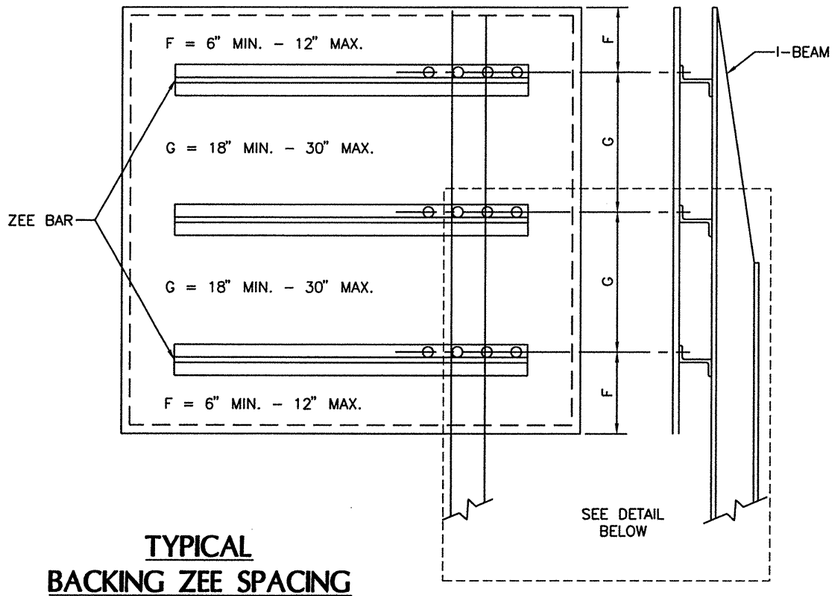

TYPICAL BACKING ZEE SPACING

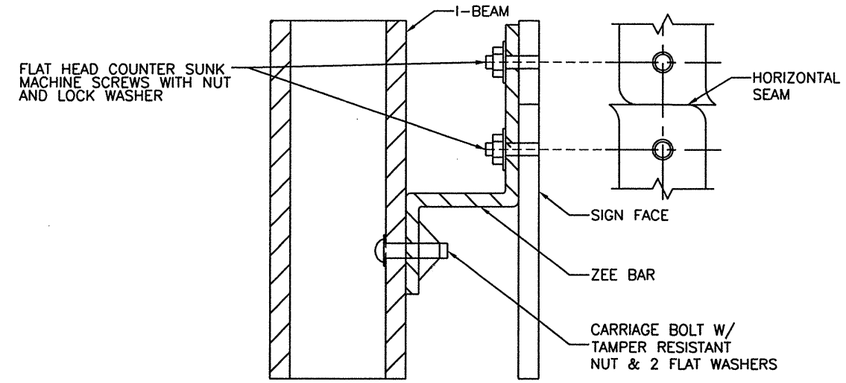

TYPICAL HORIZONTAL SEAM CLOSURE

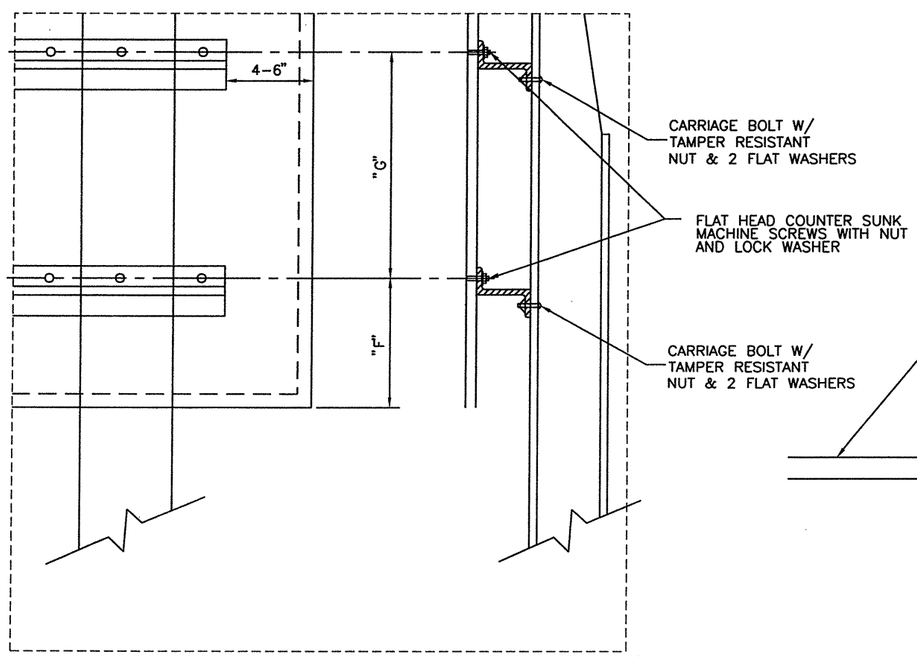

TYPICAL MOUNTING DETAIL

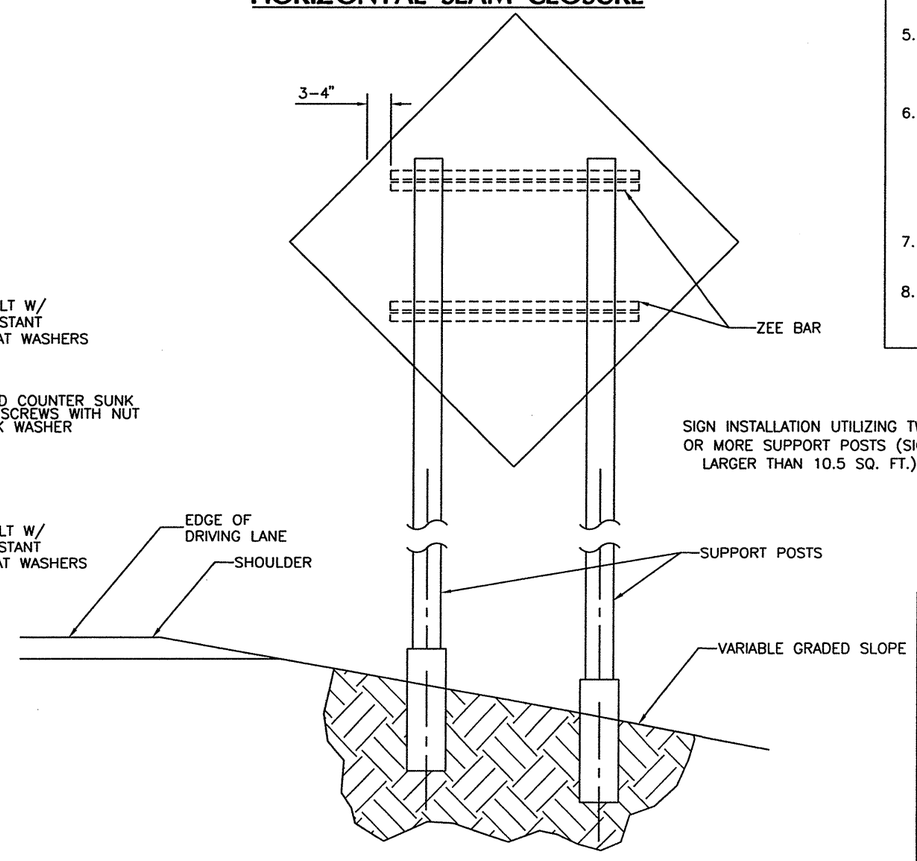

TYPICAL ZEE BACKING FOR DIAMOND SHAPED SIGN

GENERAL NOTES:

1. BACKING ZEE SHALL BE ALUMINUM ALLOY 6061-T6. EACH ZEE SHALL BE PROVIDED WITH A 9/16" X 2" HORIZONTAL SLOT FOR EACH POST MOUNTING BOLT.
2. BACKING ZEE SHALL BE FASTENED TO THE SIGN BLANK WITH 1/4" – 20 X 3/4" FLAT HEAD COUNTER SUNK MACHINE SCREWS WITH NUT AND LOCK WASHER (CADMIUM OR GALVANIZED OR 2024-T4 ALUMINUM-ALLOY) FASTENERS AT 9" ± 1/2" INTERVALS.
3. BACKING ZEE WITH SIGN FACES SHALL BE FASTENED TO THE SIGN SUPPORT POST WITH 5/16" CARRIAGE BOLT, TAMPER RESISTANT NUT & TWO WASHERS GALVANIZED OR CADMIUM PLATED TO ASTM B-766 SPECIFICATION.
4. BACKING ZEE IS NOT NEEDED WHERE SIGN IS TO BE MOUNTED ON ONE POST AND IS APPROXIMATELY TEN AND A HALF (10.5) SQUARE FEET OR LESS.
5. ALTERNATE BACKING MAY BE 1-1/2" PERFORATED SQUARE TUBING AND ASSOCIATED HARDWARE, DESCRIBED IN SERIAL 701-02-1/2 AND 701-02-2/2
6. ALUMINUM PANEL SIGNS UNDER 24" IN WIDTH SHALL BE 0.08" MINIMUM THICKNESS 6061-T6 OR 5052-H38 ALUMINUM ALLOY. ALUMINUM PANEL SIGNS 24" AND OVER IN WIDTH SHALL BE 1/8" MINUMUM THICKNESS 6061-T6 OR 5052-H38 ALUMINUM ALLOY.
7. BACKING ZEES SHALL BE 3" X 2-3/4" X 1/4" AT 2.33 LBS. PER FT. FOR 6061-T6 ALUMINUM.
8. EXPOSED BOLT HEADS ON THE FACE OF THE SIGN SHALL BE COLORED AND REFLECTORIZED TO MATCH THE SURROUNDING COLOR.

NO.	DATE	REV. BY	DESCRIPTION

REVISIONS (OR CHANGE NOTICES)

NEW MEXICO DEPARTMENT OF TRANSPORTATION STANDARD DRAWING

ALUMINUM PANEL SIGN DETAILS

APPROVED DESIGN ENGINEER 1-11-05 DATE

DESIGNED BY___ DRAWN BY ___ CHECKED BY ___

701-03-2/2 SHEET 2 OF 2

TRAFFIC CONTROL GENERAL NOTES:

1. **Traffic Control:** All Temporary Traffic Control (TTC) shall be placed in accordance with the NMDOT Standard Specifications for Highway and Bridge Construction (latest edition) and the Manual on Uniform Traffic Control Devices (latest edition) and current revisions with the following constraints:
   a. No substitutions will be allowed for channelization devices type drum unless otherwise noted in the plans.
   b. Temporary portable sign stands are an unnecessary hazard when not in use. Unused temporary sign stands shall be removed from the roadway. If temporary sign stands are staged for future use (approved by the project manager) they shall be folded up and stored away from the paved shoulder.
   c. Use of Type I or II barricades on roadways with speed limit greater than 40 mph is strictly prohibited.
   d. The work zone shall comply with, but not limited to, NCHRP 476 Guidelines for Design and Operation of Nighttime Traffic Control.

2. **BOP and EOP Signing:** BOP and EOP signing in accordance with Standard Drawing 702-03-1/1 shall be placed at the project limits prior to construction operations commencing and shall remain in place throughout the duration of the project or as directed by the project manager. Advance warning signs shall be placed at all side streets.

3. **FLAGGING:** Flagging shall be provided for safety per the plan or as directed by the project manager and shall conform to the MUTCD latest edition. The flaggers, applicable signs and other related items shall be considered incidental to the completion of the project and no separate measurement or payment will be made.
   a. All flaggers shall be certified and shall have their certification available for review at all times when on duty.
   b. Flagging operations shall adhere to NCHRP 476 Guidelines for Design and Operation of Nighttime Traffic Control; Flaggers shall wear high-visibility safety apparel that meets Performance Class 2 or 3.

4. **INGRESS AND EGRESS:** The contractor shall provide ingress and egress to local residences and businesses for the duration of the project. If access closure is required, the contractor shall request the closure through the project manager. Upon approval, the contractor shall coordinate such closure with the property owners and the project manager at least 48 hours in advance. All work associated with this shall be considered incidental to the completion of the project and no separate payment or measurement will be made.

5. **PORTABLE CHANGEABLE MESSAGE SIGNS:** The contractor shall supply Portable Changeable Message signs, which will be retained by the contractor. The message boards shall be utilized to convey messages, expected delays, and detours to motorists as required. Messages should be determined by the contractor and approved by the project manager. Two Weeks prior to start of construction: name locations, and number of message signs to be placed.

6. **TRAFFIC CONTROL PLANS:** This traffic control plan (TCP) represents a suggested method for traffic control during construction. Adjustments to the details of this TCP and requirements within the plan may be necessary due to construction activities, or as directed by the project manager. If the contractor elects to make any changes to the TCP or sequence of construction, the contractor shall submit four (4) 11" X 17" copies of the proposed TCP to the project manager at least two (2) weeks prior to implementation. The TCP shall conform to the current editions of the MUTCD, NMDOT Standard Specifications and AASHTO Roadside Design Guide. The TCP shall be in computer drafted format and shall be designed, stamped, and revised as necessary by a current New Mexico Licensed professional engineer and submitted to the Project Manager for approval. All costs associated with developing the TCP and any additional devices associated with the TCP shall be incidental to Item No. 618000, "Traffic Control Management," and no separate measurement or payment will be made, unless otherwise noted in the contract.

7. **PUBLIC INFORMATION:** The Contractor / TCP firm shall contact the District Public Information Officer, through the district office, to confirm the actual start dates of the construction and the contractor's schedule a minimum of 48 hours before any work listed in the TCP is performed.

8. **REMOVAL OF CONSTRUCTION SIGNING:** All temporary traffic control signs, sign posts and post bases installed with the construction project shall be **REMOVED** by the contractor at the completion of the project. **Removal shall consist of complete extraction of the bases from the ground.** This work shall be incidental to the completion of the project and no separate measurement or payment will be made.

9. **CONFLICTING SIGNS:** All Conflicting Signs within or in advance of the work zone shall be covered completely with an opaque non-light transmitting material so as not to damage the sign. The contractor is to use an approved method of covering existing signs so as not to damage/distort the sign sheeting or markings. The Contractor shall not place tape directly on the face of the sign. Failure to adhere to this requirement will result in the Contractor replacing the sign at no cost to the NMDOT.

10. **TEMPORARY STRIPING:** The use of black paint to cover existing lane lines or symbols is strictly prohibited. All temporary striping shall be placed before opening any work zone or portion of a work zone in accordance with the MUTCD and the approved traffic control plan. This work shall be included in Item No. 704100, "Removable Marking Tape" and no separate measurement or payment will be made, unless otherwise noted in the contract.

11. **CONSTRUCTION SIGNING:** All construction signing shall meet retroreflectivity requirements listed in section 702.2.1 "Construction Signing" of the NMDOT Standard Specifications.
    a. All construction signing on the interstate and on high speed (greater or equal to 45 MPH) multilane divided facilities shall be double indicated (left and right shoulders).
    b. All signs that are part of work zone that are in place for more than 3 days shall be placed on breakaway posts. If there are physical restrictions at the site that prohibit the sign from being placed on posts, the contractor shall notify the District Traffic Engineer and obtain a waiver.
    c. All warning and regulatory signs shall meet the following size requirements:

Interstate:	Warning sign 48"x48"	Regulatory 48"x60"
Non-Interstate:	Warning sign 36"x36"	Regulatory 36"x42"

    d. The following reflectivity material shall be used on all construction signing placed on NMDOT roadways.

SIGN	SIGN CODE	COLOR	LETTER SHEETING	BACKGROUND SHEETING
APPROACH SIGNS	W20-XX	BLK/FLUORESCENT ORANGE	-------	TYPE VIII, IX, XI
CHEVRONS	W1-8	BLK/FLUORESCENT ORANGE	-------	TYPE VIII, IX, XI
CURVES	W1-2	BLK/FLUORESCENT ORANGE	-------	TYPE VIII, IX, XI
REVERSE CURVE	W1-4	BLK/FLUORESCENT ORANGE	-------	TYPE VIII, IX, XI
MERGE	W4-1	BLK/FLUORESCENT ORANGE	-------	TYPE VIII, IX, XI
NO PASSING ZONE	W14-3	BLK/FLUORESCENT ORANGE	-------	TYPE VIII, IX, XI
FLAGGER PADDLE	-------	BLK/FLUORESCENT ORANGE on Side 1with RED on Side 2	-------	TYPE VIII, IX, XI Type IV White
ALL DRUMS	-------	WHITE/ FLUORESCENT ORANGE	-------	TYPE VIII, IX, XI Type IV white
All Other Const. Signs	-------	BLK/FLUORESCENT ORANGE	-------	TYPE VIII, IX, XI

12. **REMOVAL OF TEMPORARY STRIPING:** All relevant temporary striping shall be removed upon completion of each phase of construction. The only approved method of stripe removal is water blasting. The contractor is to ensure that there is no conflicting striping through the work zone or through detours. This work shall be included in Item No. 618000, "Traffic Control Management," and no separate measurement or payment will be made, unless otherwise noted in the contract.

13. **SATISFACTORY WORKING CONDITION:** All traffic control devices used on this project shall be in satisfactory working condition and shall function equivalent to new equipment in accordance with the MUTCD (latest edition). Traffic Control work zone shall comply with requirements of FHWA 23CFR 630 Subpart K for traffic control devices. At the beginning of the project 100% of signs/devices shall be in acceptable condition (new or like new). After 2 weeks at no time shall less than 75% of devices be in acceptable condition. All traffic devices shall be kept clean throughout the duration of the project. Any sign that is tagged by graffiti shall be cleaned (as long as it does not affect the reflective sheeting) within 24 hours or removed and replaced.

14. **TRAFFIC CONTROL FIELD ADJUSTMENTS:** Location of device spacing shall be field verified to account for existing roadway features which may obstruct placement and/or view of devices. Any changes to the traffic control plan should be approved by the District Traffic Engineer or his/her designee. All field adjustments of signs should be approved by the District Traffic Engineer. This work shall be considered incidental to Item No. 618000 "Traffic Control Management" and no additional measurement or payment will be made, unless noted in the contract.

15. **PEDESTRIANS:** Routes/paths shall not be closed without providing a detour. ADA requirements shall be adhered to; ADA compliant devices shall be used for channelization.

16. **BICYCLES:** Shall be accommodated or rerouted per MUTCD recommendations.

NO	DATE	REV. BY	DESCRIPTION

REVISIONS (OR CHANGE NOTICES)

NEW MEXICO
DEPARTMENT OF TRANSPORTATION
STANDARD DRAWING

TEMPORARY TRAFFIC CONTROL
GENERAL NOTES

APPROVED: Afshin [signature] DESIGN ENGINEER DATE 12/10/15

DESIGNED BY: ______ DRAWN BY: ______ CHECKED BY: ______

702-01-1/5

TRAFFIC CONTROL GENERAL NOTES (CONTINUED):

17. **TEMPORARY CONCRETE WALL BARRIER (CWB):** When flaring the leading end of a Temporary Wall Barrier (CWB) within a construction work zone, the flare rate shall be done in accordance with the rates shown in the table below: (NMDOT Standard Drawing 606-20-5/5)

Roadway Speed Limit	Minimum Taper/ Flare Rate	Desirable Taper/ Flare Rate
Less than 45 MPH	8:1	18:1
Between 45 MPH and 55 MPH	10:1	24:1
Greater than 55 MPH	15:1	30:1

a. When temporary wall barrier is placed in a construction work zone, a 5' clear area is required between the CWB and the work zone to accommodate barrier deflection. When a 5' clear area is not attainable, CWB shall be anchored to the pavement surface.

b. Temporary CWB shall be provided with reflective barrier delineators as indicated in NMDOT standard drawing 606-21-1/1.

18. **CRASH ATTENUATORS:** The crash cushion attenuators shall be designed as per the District Traffic Engineer's recommendations. The District may elect to either utilize the pre-construction posted speed, or the 85% speed in the layout of the crash cushion attenuators within the work zone.

19. **DROP OFF POLICY:** In the areas of pavement operations or other activities within the traveled way and adjacent to the existing traveled lane, the contractor shall assure that no pavement drop-offs are left exposed during non-working hours. The contractor shall initiate corrective means as per "the New Mexico Department of Transportation Pavement Drop-off Guideline" to achieve a minimum 6:1 slope between traveled lanes and a minimum 3:1 slope adjacent to the existing traveled lane with two 11foot driving lanes as shown in the detail below. (AD241)

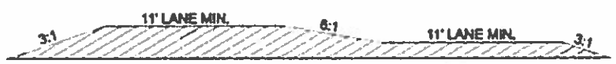

20. **Lane Closures:** The Contractor/TCP firm shall not place a lane closure taper along a horizontal curve. The taper shall be placed in advance of the horizontal curve so that it is visible to all oncoming traffic. On crest vertical curves, the Contractor/TCP firm shall place lane closures in advance of, or at the beginning of the curve to enhance visibility of the lane closure to oncoming traffic.

21. **Sequential Arrow Display:** Placement of the sequential arrow shall be at or near the beginning of the lane closure taper. In areas of insufficient pavement width, the sequential arrow may be placed within the taper, but not to exceed ½ the taper length. In all cases, the sequential arrow shall be placed behind the channelization devices. The shoulder shall be closed in advance of the merging taper to direct vehicular traffic to remain within the traveled way. (MUTCD 6F.61)

22. **ADDITIONAL SIGNS:** "BUMP", "LOOSE GRAVEL", "LANE DROP-OFF SIGN" sign placement: The contractor shall place W8-1 sign ("BUMP" - B/FO), W8-7 sign ("LOOSE GRAVEL" - B/FO) and/or W8-17 signs ("SHOULDER DROP-OFF" - B/FO) in advance of bridge approaches or other locations during cold milling and overlay operations as needed or as directed by the project manager.

23. **CLEAR ZONE:** All stationary objects within clear zone shall be properly shielded and outlined with drums mounted with Type "A" warning lights. Use of vertically mounted retro-reflective material in lieu of a Type A warning light is strictly prohibited.

a. Equipment, materials, or vehicles stored within Right -of-way (ROW) shall be outside of clear zone (based on existing posted speed).

b. Equipment, material or vehicles stored within clear zone shall be properly shielded.

c. Materials, work activities, equipment, and vehicles shall not be stored within the established buffer space of the project work zone.

d. All construction equipment, vehicles and materials shall remain behind traffic control devices.

24. **TRAFFIC CONTROL MANAGEMENT:** The contractor or the traffic Control Subcontractor shall provide a Traffic Control Supervisor on site during working hours for response within 1 hour to traffic control Issues/concerns.

25. **INCIDENT MANAGEMENT:** Contractor is required to comply with requirements of FHWA CFR 630 Subpart J for Work Zone Safety and Mobility which shall include an Incident Management Plan to be utilized for the entire duration of the project. The Incident Management Plan shall contain a method to address traffic flow through the work zone during incidents. The Incident Management Plan must be reviewed and approved by the District Traffic Engineer. The plan shall contain the following as a minimum:

a. Contacts for the contractor, local enforcement, safety agencies, municipal agencies, public information officer and NMDOT

b. Steps to be followed during incidents

c. Method of recording and reporting incidents

26. **LIST OF INCIDENTALS - No Additional Payment Associated**

LIST OF INCIDENTALS for Temporary Traffic ControlA MAINTENANCE OF TEMPORARY PAVEMENT MARKINGS FOR PROJECT DURATION

	LIST OF INCIDENTALS for Temporary Traffic Control
A.	MAINTENANCE OF TEMPORARY PAVEMENT MARKINGS FOR PROJECT DURATION

NO.	DATE	REV BY	DESCRIPTION

REVISIONS (OR CHANGE NOTICES)

NEW MEXICO
DEPARTMENT OF TRANSPORTATION
STANDARD DRAWING

TEMPORARY TRAFFIC CONTROL
GENERAL NOTES

APPROVED: Afshin Shafi 12/10/15
DESIGN ENGINEER DATE

DESIGNED BY: DRAWN BY: CHECKED BY:

702-01-2/5

SIGN FACE DETAILS

FOR CONSTRUCTION / MAINTENANCE

1. SIGNS SHALL MEET SPECIFICATIONS IN THE STANDARD HIGHWAY SIGNS MANUAL AND CURRENT EDITION OF THE MUTCD.
2. SEE CURRENT EDITION OF MUTCD FOR ADDITIONAL SIGNS.
3. ALL SIGNS SHALL COMPLY WITH SHEETING REQUIREMENTS AS SPECIFIED IN STANDARD DRAWING 702-01-3/3.
4. SIGN SIZES MAY BE ADJUSTED PER MUTCD RECOMMENDATIONS.

WARNING SIGNS:

ALL WARNING SIGNS ARE BLACK/FLUORESCENT ORANGE UNLESS OTHERWISE SPECIFIED.

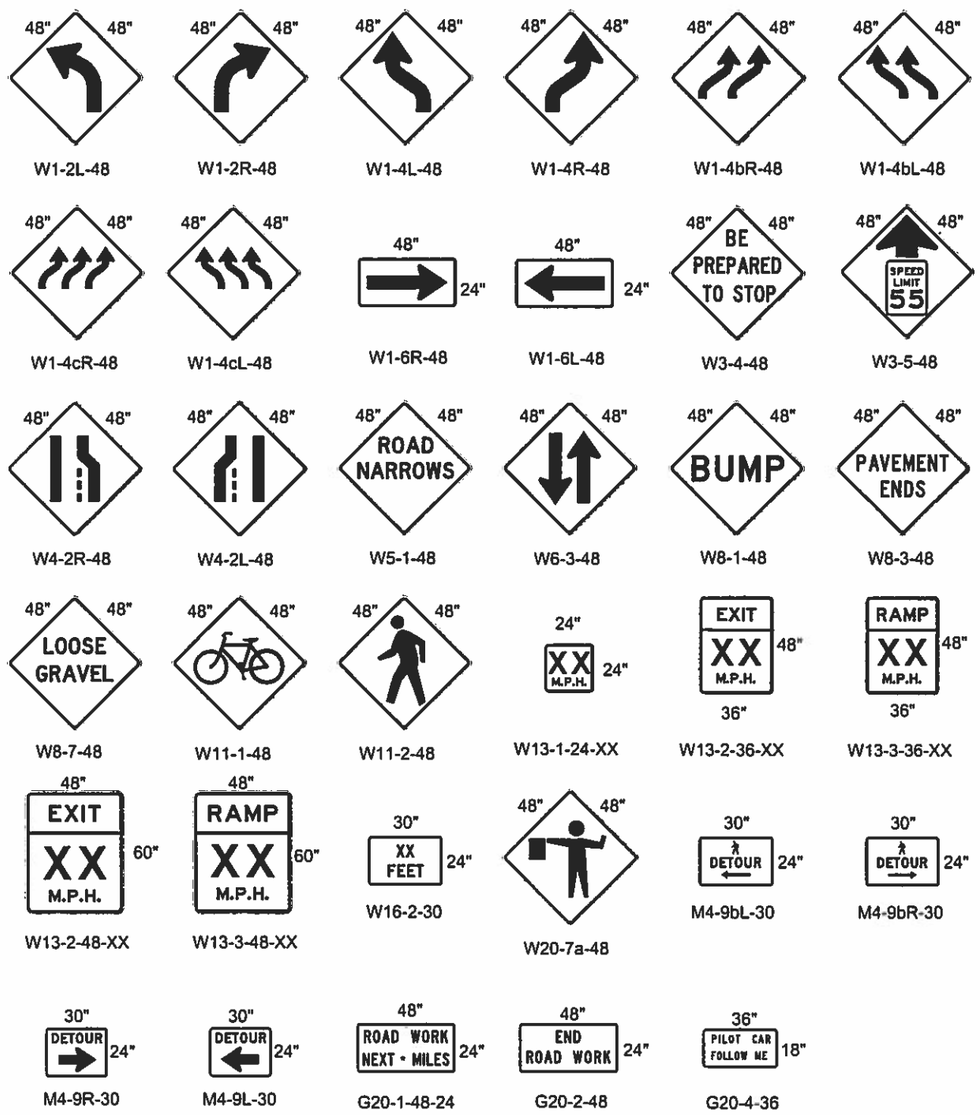

* THESE SIGNS REQUIRE APPROPRIATE DISTANCE INDICATION
(½ MILE, 1 MILE, 1500 FT., 750 FT., 500 FT., 350 FT.)

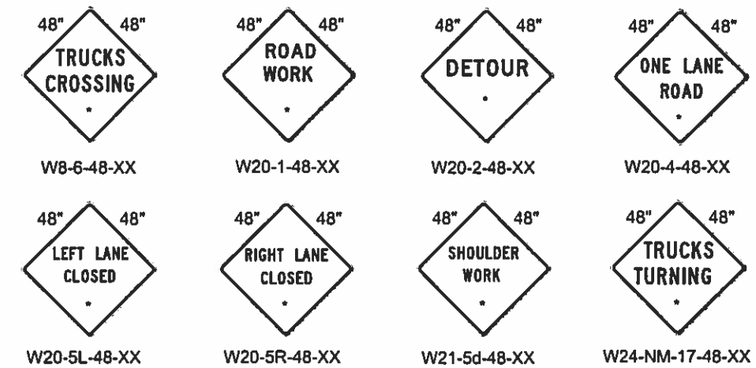

REGULATORY SIGNS:

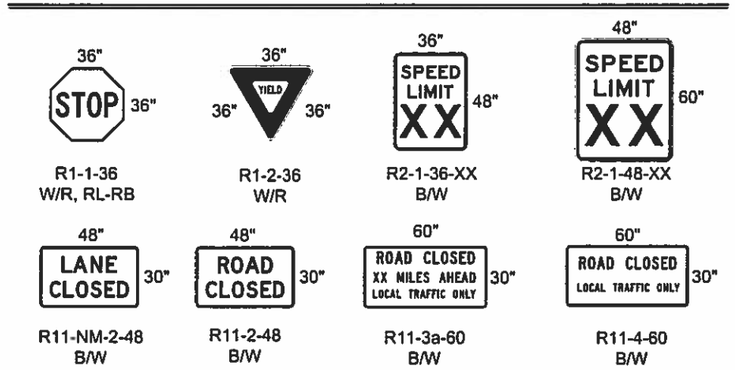

SPECIAL SIGNS:

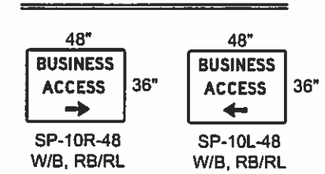

8 FT. TYPE III BARRICADES

BARRICADE SYMBOL

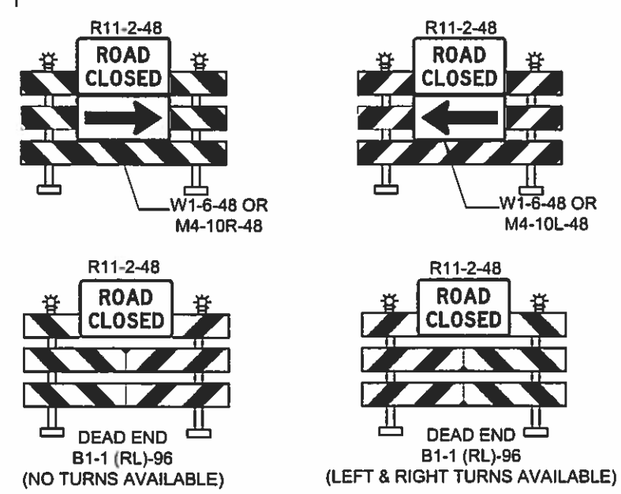

NO.	DATE	REV. BY	DESCRIPTION

REVISIONS (OR CHANGE NOTICES)

NEW MEXICO
DEPARTMENT OF TRANSPORTATION
STANDARD DRAWING

CONSTRUCTION & MAINTENANCE
SIGN FACE DETAILS

APPROVED: Afshin Razi 12/10/15
DESIGN ENGINEER DATE

DESIGNED BY: DRAWN BY: CHECKED BY:

702-01-3/5

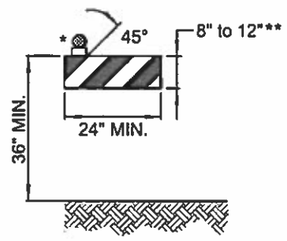

TYPE I BARRICADE *,**
LOW SPEED ROADWAY (≤ 40 MPH)

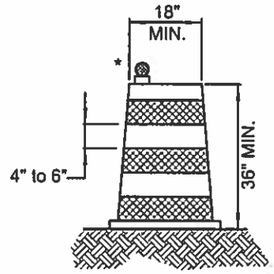

DRUM*

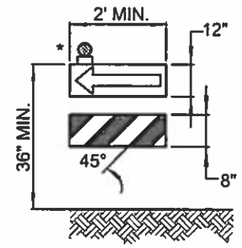

DIRECTION INDICATOR BARRICADE *,**

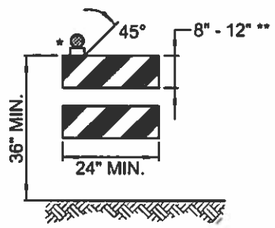

TYPE II BARRICADE ***
LOW SPEED ROADWAY (≤ 40 MPH)

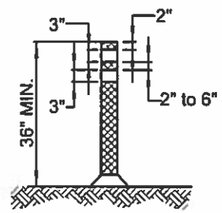

TUBULAR MARKERS

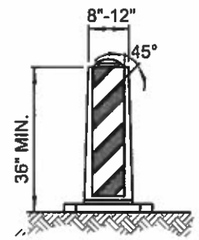

VERTICAL PANEL ***

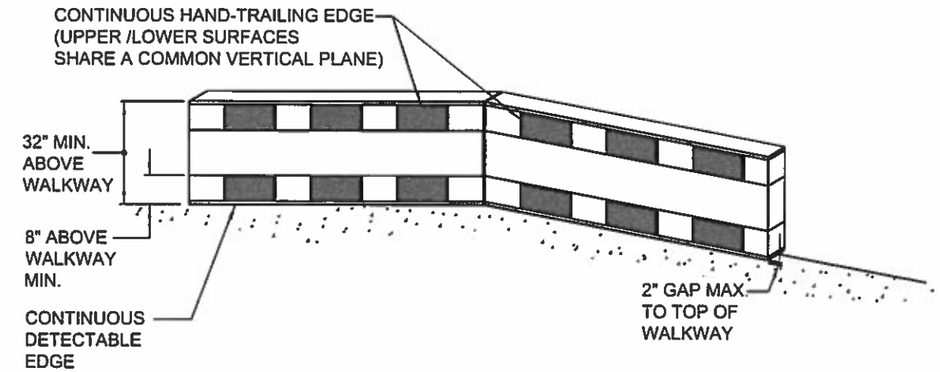

PEDESTRIAN CHANNELIZATION DEVICE (PCD)

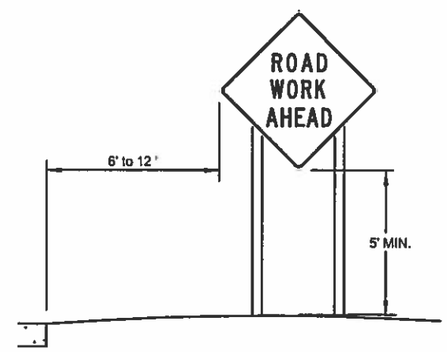

RURAL AREA

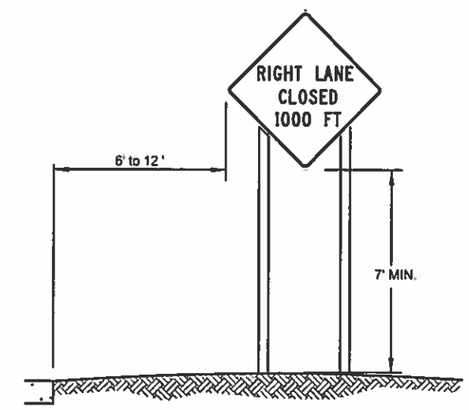

BUSINESS, COMMERCIAL, OR RESIDENTIAL AREA
(WITHOUT CURB)

HEIGHT AND LATERAL LOCATIONS OF SIGNS - TYPICAL INSTALLATIONS

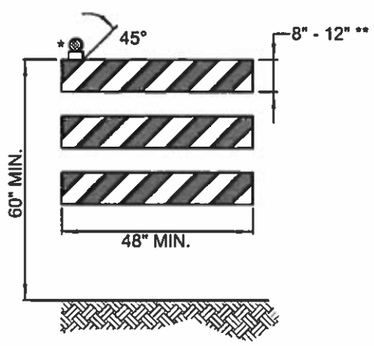

TYPE III BARRICADE *,**

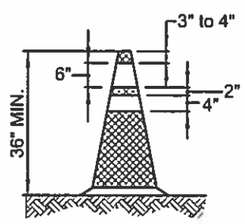

NIGHT AND/OR FREEWAY
HIGH SPEED ROADWAY
(≥ 45 MPH)

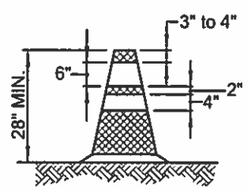

DAY AND LOW
SPEED ROADWAY
(≤40 MPH)

CONES

NOTE:
ALL DEVICES USED ON NMDOT ROADWAYS SHALL BE ON THE APPROVED PRODUCTS LIST.

* WARNING LIGHT (OPTIONAL)
** NOMINAL LUMBER DIMENSIONS ARE SATISFACTORY FOR BARRICADE RAIL WIDTH DIMENSIONS.
*** RAIL STRIPE WIDTHS SHALL BE 6 INCHES. EXCEPTION: WHERE RAIL LENGTHS ARE LESS THAN 36 INCHES. THEN 4 INCH WIDE STRIPES MAY BE USED.

THE SIDES OF BARRICADES FACING TRAFFIC SHALL HAVE RETROREFLECTIVE RAIL FACES. VERTICAL PANELS AND BARRICADES USED ON HIGH-SPEED ROADWAYS, EXPRESSWAYS, AND FREEWAYS SHALL HAVE A MINIMUM OF 270 SQUARE INCHES OF RETROREFLECTIVE AREA FACING TRAFFIC.

DATE	REV. BY	DESCRIPTION

REVISIONS (OR CHANGE NOTICES)

NEW MEXICO
DEPARTMENT OF TRANSPORTATION
STANDARD DRAWING

CHANNELIZATION DEVICES FOR CONSTRUCTION, MAINTENANCE, UTILITY & INCIDENT MANAGEMENT OPERATIONS

APPROVED: Ashin S. Patel DESIGN ENGINEER 11/3/15 DATE

DESIGNED BY: DRAWN BY: CHECKED BY:

702-01-4/5

FIGURE 1

SHORT TERM WORK ZONE INTERIM MARKINGS (IN PLACE FOR LESS THAN 14 CALENDAR DAYS) (MINIMUM OF 2 COATS OR AS DIRECTED BY THE PROJECT MANAGER)

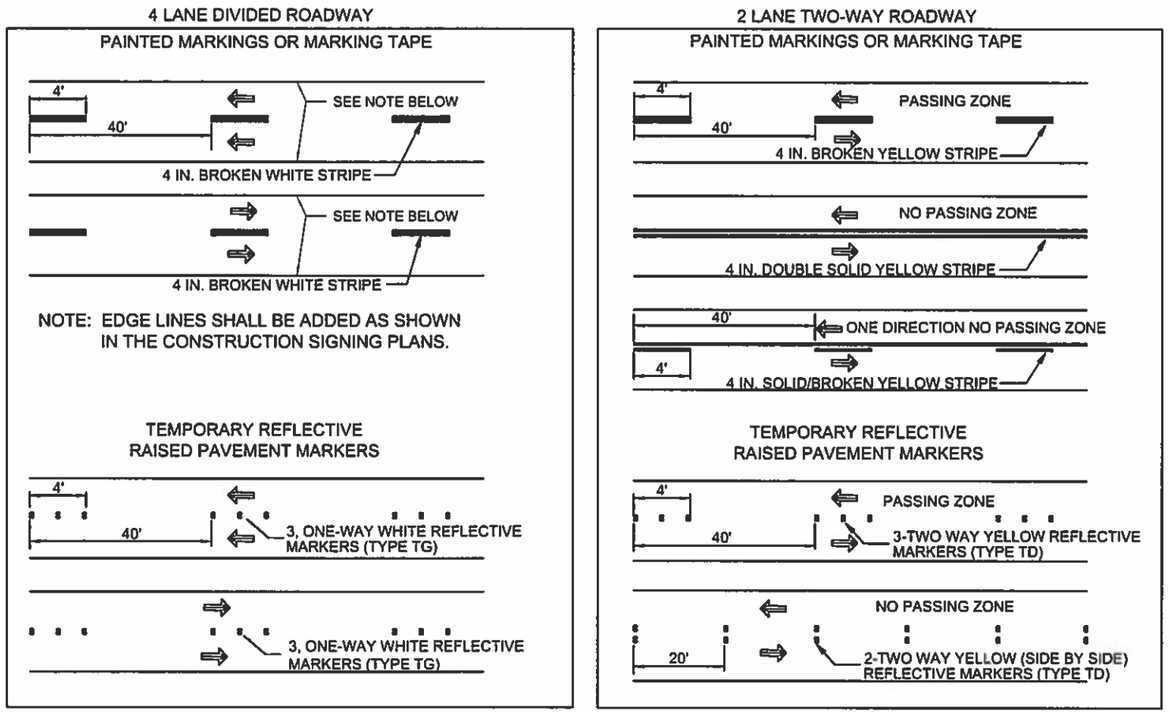

FIGURE 1A

STANDARD WORK ZONE INTERIM MARKINGS (IN PLACE FOR 14 CALENDAR DAYS OR MORE) (MINIMUM OF 2 COATS OR AS DIRECTED BY THE PROJECT MANAGER)

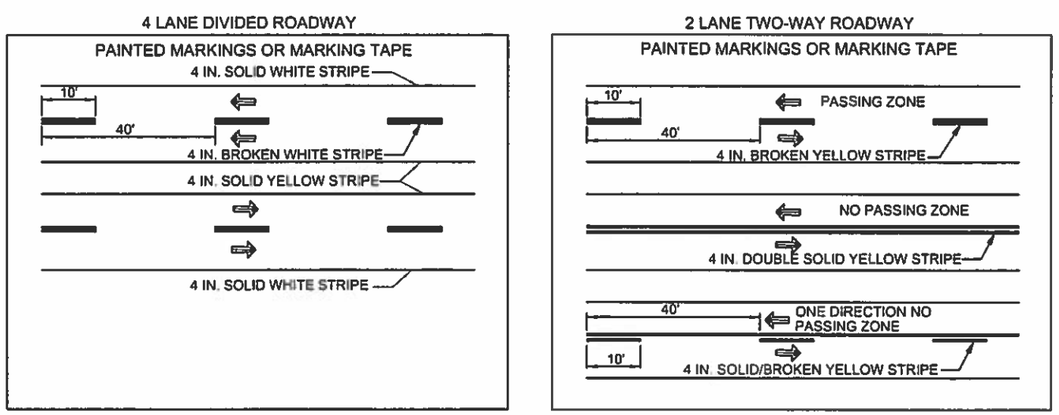

GENERAL NOTES

WORK ZONE INTERIM MARKINGS:

1. The contractor shall place reflectorized painted markings on each lane line on each intermediate lift of surfacing or milled surface at the end of the daily surfacing or milling operation. These markings shall be placed in accordance with Figure 1 or Figure 1 A on this sheet, or as directed by the Project Manager.

2. In the event the painted markings cannot be placed as described above, the contractor shall, with the approval of the project manager, place marking tape or temporary reflective raised pavement markers. The contractor will be responsible for maintaining the temporary raised pavement markers when requested by the project manager, District Traffic Engineer or their designees. maintenance of the tabs will be considered incidental to the completion of the project.

3. The contractor shall place removable marking tape or temporary reflective raised pavement markers after placement of the final lift of surfacing if permanent markings are not placed during the same working day. These markings shall be placed in accordance with Figure 1 or Figure 1 A on this sheet, or as directed by the project manager.

4. On roadways with sever curvature, broken-line interim markings with half-cycle lengths and a minimum of two foot (2') stripes or a group of two temporary reflective pavement markings spaced 2 feet apart may be used were passing is allowed. Interim edge lines or channelization lines for delineation may be used as needed or as directed by the project manager. Passing/ no passing zone signing to supplement interim markings for delineation may be used as needed or as directed by the project manager. All interim markings shall be placed in accordance with the current edition of the MUTCD.

5. Shoulder and gore area delineation will be required on each intermediate lift of surfacing or milled surface at the end of the day's pavement operation. Payment for marking tape or temporary pavement markings will be paid for under the unit priced of reflectorized painted markings, unless otherwise specified within the contract or Traffic Control Notes. Contractor may substitute edge line pavement marking with traffic control devices such as drums or vertical panels for a maximum 13 day period.

NO.	DATE	REV. BY	DESCRIPTION

REVISIONS (OR CHANGE NOTICES)

NEW MEXICO
DEPARTMENT OF TRANSPORTATION
STANDARD DRAWING

TEMPORARY TRAFFIC
MARKINGS FOR CONSTRUCTION

APPROVED — DESIGN ENGINEER — DATE 1/3/15

DESIGNED BY___ DRAWN BY___ CHECKED BY___

702-01-5/5

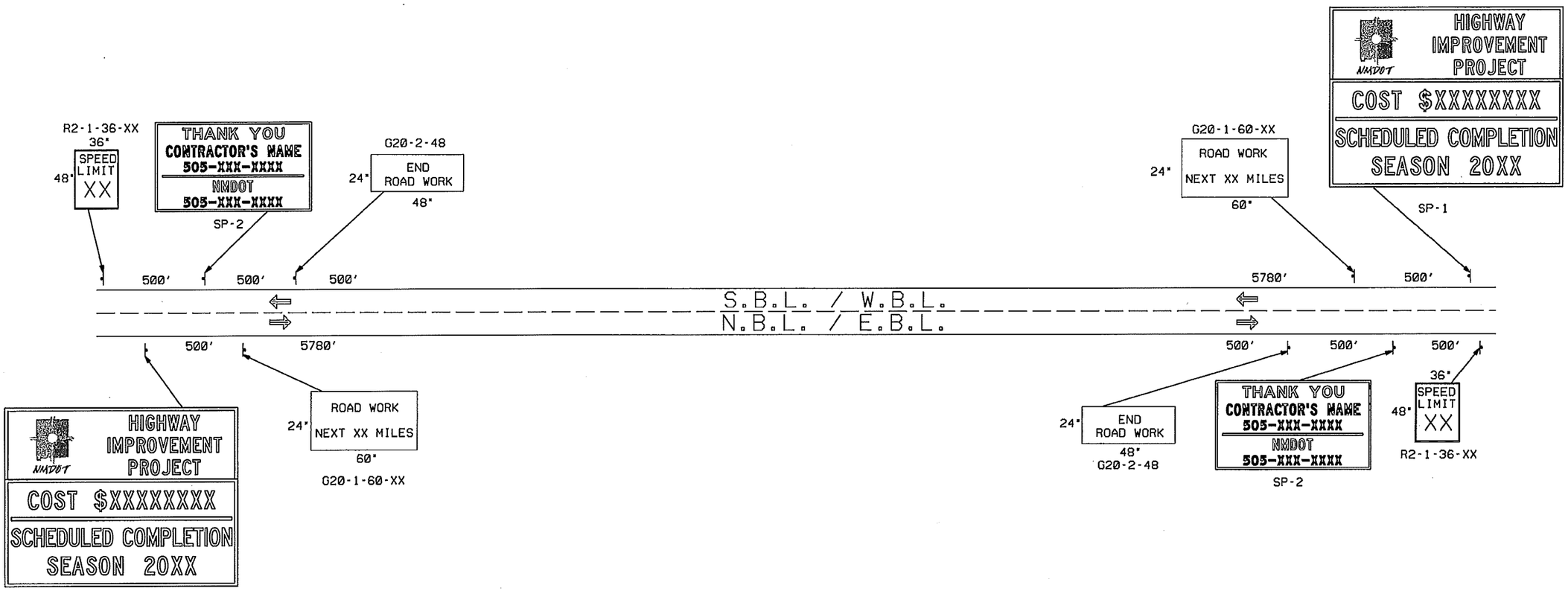

SIGNING FOR BOP & EOP

NOTES:

1. SIGNS G20–1–60, G20–2–48, R2–1–36–XX, SP–1, AND SP–2 SHALL BE PLACED IN ADVANCE OF THE PROJECT LIMITS AND SHALL REMAIN IN PLACE THROUGH THE DURATION OF THE PROJECT OR AS DIRECTED BY THE PROJECT MANAGER. THESE SIGNS SHALL BE MOUNTED ON A STEEL POST AND BASE POST BREAKAWAY SYSTEM, SEE SERIAL 701–02–1/3, 701–02–2/3, & 701–02–3/3
2. SEE SERIAL 702–01–1/3, FOR SIGN FACE DETAILS.

NO.	DATE	REV. BY	DESCRIPTION

REVISIONS (OR CHANGE NOTICES)

NEW MEXICO
DEPARTMENT OF TRANSPORTATION
STANDARD DRAWING

BOP/EOP SIGNING
(2-LANE)

APPROVED [signature] 7-15-05
DESIGN ENGINEER DATE

DESIGNED BY ___ DRAWN BY ___ CHECKED BY ___

702-03-1/1

TRAFFIC MARKERS - OBJECT MARKERS

	TYPE I		TYPE 2			TYPE 3			END OF ROAD MARKER	
	OM1-1	OM1-2	A3 OR A3/A3	OM2-1V	OM2-1H	OM-3L	OM-3C	OM-3R	OM4-1	OM4-2
	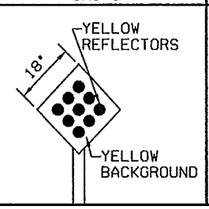	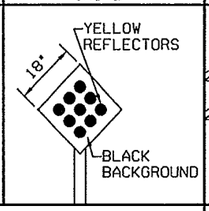	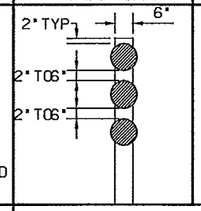	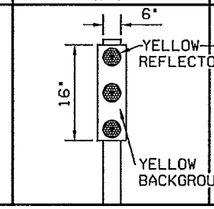	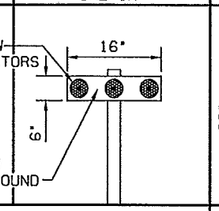	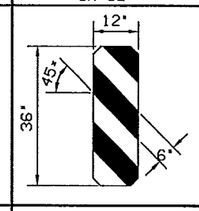	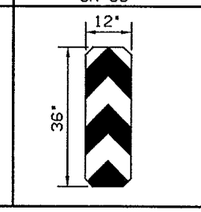	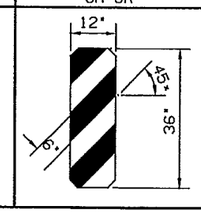	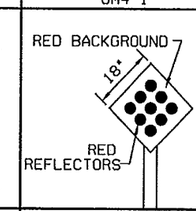	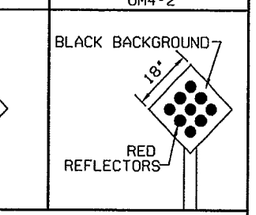
POST	2 LB/FT STEEL U-CHANNEL W/ BREAKAWAY BASE POST		1.12 LB/FT STEEL U-CHANNEL			2 LB/FT STEEL U-CHANNEL OR 1.5" X 1.5", 12 GA. SQUARE TUBING W/ BREAKAWAY BASE POST			2 LB/FT STEEL U-CHANNEL W/BREAKAWAY BAST POST	

TRAFFIC MARKERS - DELINEATORS

	SINGLE			DOUBLE			1/10 MILE DELINEATOR	
	A1, C1, A1/A1, A1/C1, A1/R1, C1/C1, C1/R1			A2, C2, A2/A2, A2/C2, A2/R2, C2/C2, C2/R2				
	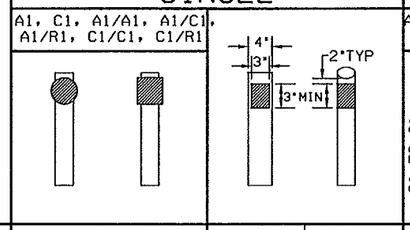			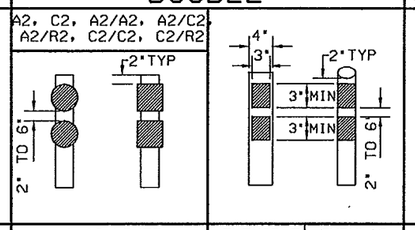			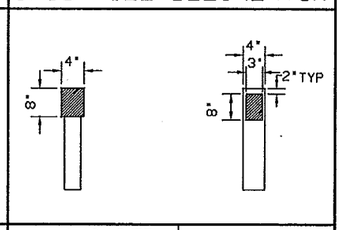	
POST	1.12 LB/FT STEEL U-CHANNEL	FLEXIBLE (YELLOW OR WHITE)	TUBULAR FLEXIBLE (Y OR W)	1.12 LB/FT STEEL U-CHANNEL	FLEXIBLE (YELLOW OR WHITE)	TUBULAR FLEXIBLE (Y OR W)	1.12 LB/FT STEEL U-CHANNEL	FLEXIBLE (WHITE OR BROWN)

1. ALL HARDWARE SHALL MEET FHWA CRASHWORTHINESS REQUIREMENTS AS PER NCHRP 350 GUIDELINES AND SHALL BE ON THE DEPARTMENT'S APPROVED PRODUCT LIST.
2. SEE DEPARTMENT'S APPROVED PRODUCTS LIST FOR APPROVED U-CHANNEL & SQUARE TUBING, FLEXIBLE & TUBULAR TRAFFIC MARKER REFLECTOR MANUFACTURERS.
3. DELINEATOR POST & REFLECTOR UNIT COLOR SHALL CONFORM TO THE COLOR OF EDGE LINES.
4. BREAKAWAY BASE POST SYSTEMS FOR TYPE 1, TYPE 3 & END OF ROAD OBJECT MARKERS REQUIRED. SEE APPROVED PRODUCT LIST FOR APPROVED SYSTEMS & MANUFACTURER'S RECOMMENDATIONS.
5. STANDARD DELINEATORS ARE NOT TO CONFLICT WITH 1/10 MILE DELINEATORS. WHEN THE TWO COINCIDE, 1/10 MILE DELINEATORS WILL BE USED.
6. SEE SECTION 703 OF THE NEW MEXICO DEPARTMENT OF TRANSPORTATION STANDARD SPECIFICATIONS FOR HIGHWAY AND BRIDGE CONSTRUCTION FOR ADDITIONAL INFORMATION.
7. FOR SQUARE TUBING WITH BREAKAWAY BASE POST SEE STANDARDS 701-02-1/3, 701-02-2/3 AND 701-02-3/3.
8. 1/10 MILE DELINEATORS SHALL BE USED ON INTERSTATE ROAD WAYS AND MAY BE USED ON HIGH SPEED 4-LANE DIVIDED ROADWAYS.

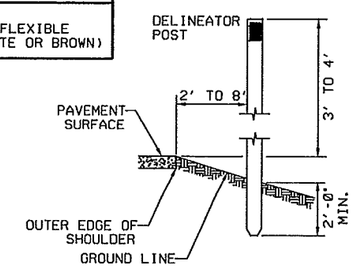

TYPICAL 1/10 MILE DELINEATOR INSTALLATION

REFLECTOR UNIT TYPES

SINGLE SIDE MOUNT	A1	SINGLE YELLOW REFLECTOR
	A2	DOUBLE YELLOW REFLECTOR
	A3	TRIPLE YELLOW REFLECTOR (TYPE 2 OBJECT MARKER)
	C1	SINGLE WHITE REFLECTOR
	C2	DOUBLE WHITE REFLECTOR
DOUBLE SIDE MOUNT (BACK TO BACK)	A1/A1	1 EACH
	A1/C1	1 EACH
	A1/R1*	1 EACH
	C1/C1	1 EACH
	C1/R1*	1 EACH
	A2/A2	2 EACH
	A2/C2	2 EACH
	A2/R2*	2 EACH
	C2/C2	2 EACH
	C2/R2*	2 EACH
	A3/A3	3 EACH (TYPE 2 OBJECT MARKER)

*BIDIRECTIONAL MOUNTING BRACKET REQUIRED TO ORIENT RED REFLECTOR

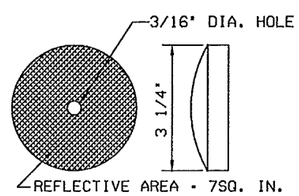

COLORS: YELLOW (AMBER)
WHITE (CRYSTAL)
RED

PRISMATIC REFLECTOR

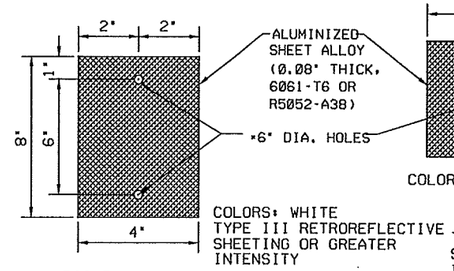

COLORS: WHITE
TYPE III RETROREFLECTIVE SHEETING OR GREATER INTENSITY

DIO-7-4, 1/10 MILE

PANEL REFLECTOR

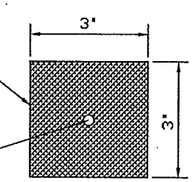

COLORS: YELLOW (AMBER)
WHITE (CRYSTAL)
RED
TYPE III RETROREFLECTIVE SHEETING OR GREATER INTENSITY

PANEL REFLECTOR

NO.	DATE	REV. BY	DESCRIPTION

REVISIONS (OR CHANGE NOTICES)

NEW MEXICO
DEPARTMENT OF TRANSPORTATION
STANDARD DRAWING

ROAD OBJECT MARKER DETAILS

APPROVED [signature] DESIGN ENGINEER 3-14-05 DATE

DESIGNED BY ___ DRAWN BY ___ CHECKED BY ___

703-01-1/3 SHEET 1 OF 3

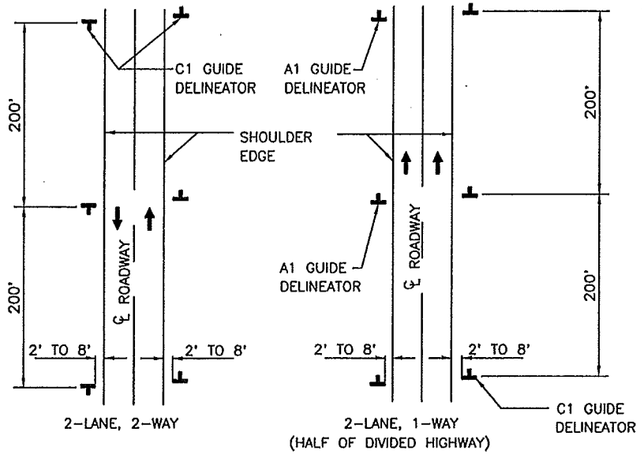

PLAN ON HIGH FILLS

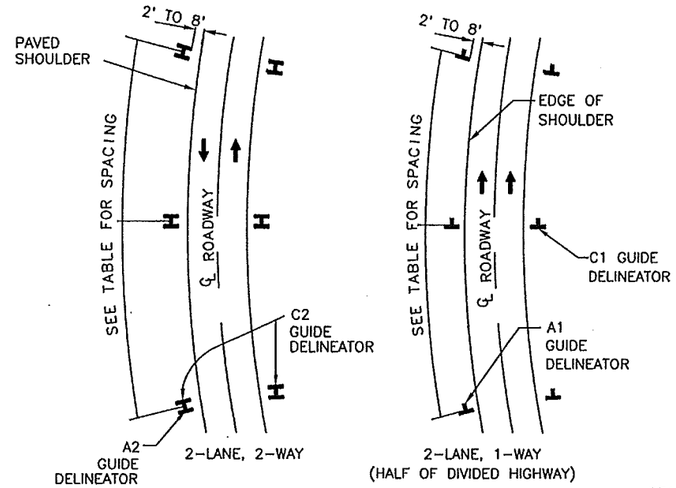

PLAN ON CURVES

DELINEATOR TO BE PLACED ON OUTSIDE OF CURVES ON HIGH FILLS ONLY. SPACE SAME AS HIGH FILLS ON TANGENT

SPACING ON CURVES

DISTANCE IN FEET ROUNDED TO THE NEAREST 5 FEET				
RADIUS OF CURVES (IN FEET)	SPACING OF CURVES (IN FEET)	SPACING IN ADVANCE AND BEYOND CURVE (IN FEET)		
		1ST	2ND	3RD
50'	20'	40'	60'	120'
115'	25'	50'	75'	150'
180'	35'	70'	105'	210'
250'	40'	80'	120'	240'
300'	50'	100'	150'	300'
400'	55'	110'	165'	300'
500'	65'	130'	195'	300'
600'	70'	140'	210'	300'
700'	75'	150'	225'	300'
800'	80'	160'	240'	300'
900'	85'	170'	255'	300'
1000'	90'	180'	270'	300'
1200'	100'	200'	300'	300'
1400'	110'	220'	300'	300'
1700'	120'	240'	300'	300'
2000'	130'	260'	300'	300'
2500	145'	280'	300'	300'
3000'	160'	300'	300'	300'

SPACING FOR SPECIFIC RADII MAY BE INTERPOLATED FROM TABLE. THE MINIMUM SPACING SHOULD BE 20ft. THE SPACING ON CURVES SHOULD NOT EXCEED (300ft.). IN ADVANCE OF OR BEYOND A CURVE, AND PROCEEDING AWAY FROM THE END OF THE CURVE, THE SPACING OF THE FIRST DELINEATOR IS 2S, THE SECOND 3S, AND THE THIRD 6S BUT NOT TO EXCEED 300ft. S REFERS TO THE DELINEATOR SPACING FOR SPECIFIC RADII COMPUTED FROM THE FORMULA $S=3\sqrt{R-50}$.

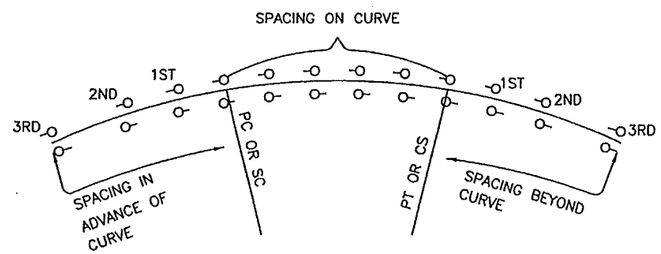

PLACEMENT ON CURVES

SEE TABLE "SPACING ON CURVES" FOR DISTANCES BETWEEN DELINEATORS.

GENERAL NOTES

1. WHERE THE SHOULDER AND PAVED SURFACING TAPER CONSTITUTES THE USEABLE SHOULDER, GUIDE MARKERS SHALL BE PLACED AT THE OUTSIDE EDGE OF THE SURFACE TAPER OR 8'-0" FROM THE EDGE OF DRIVING LANE.
2. DELINEATORS SHOULD BE PLACED IN LINE WITH OR INSIDE FACE AT GUARDRAIL BUT SHOULD NOT BE PLACED CLOSER THAN 2'-0" FROM EDGE OF SHOULDER.
3. STANDARD DELINEATORS ARE NOT TO CONFLICT WITH 1/10 MILE DELINEATORS. WHEN THE TWO COINCIDE, 1/10 MILE DELINEATORS WILL BE USED.
4. SEE SERIAL 703-01-1/3 FOR TYPES OF GUIDE DELINEATORS AND OBJECT MARKERS.

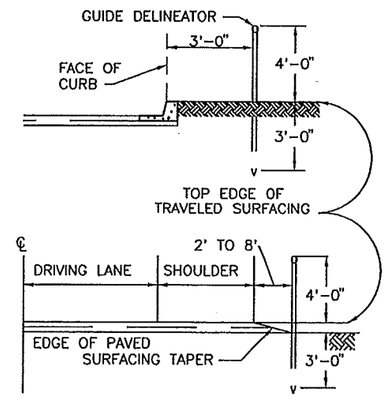

TYPICAL DELINEATOR INSTALLATION

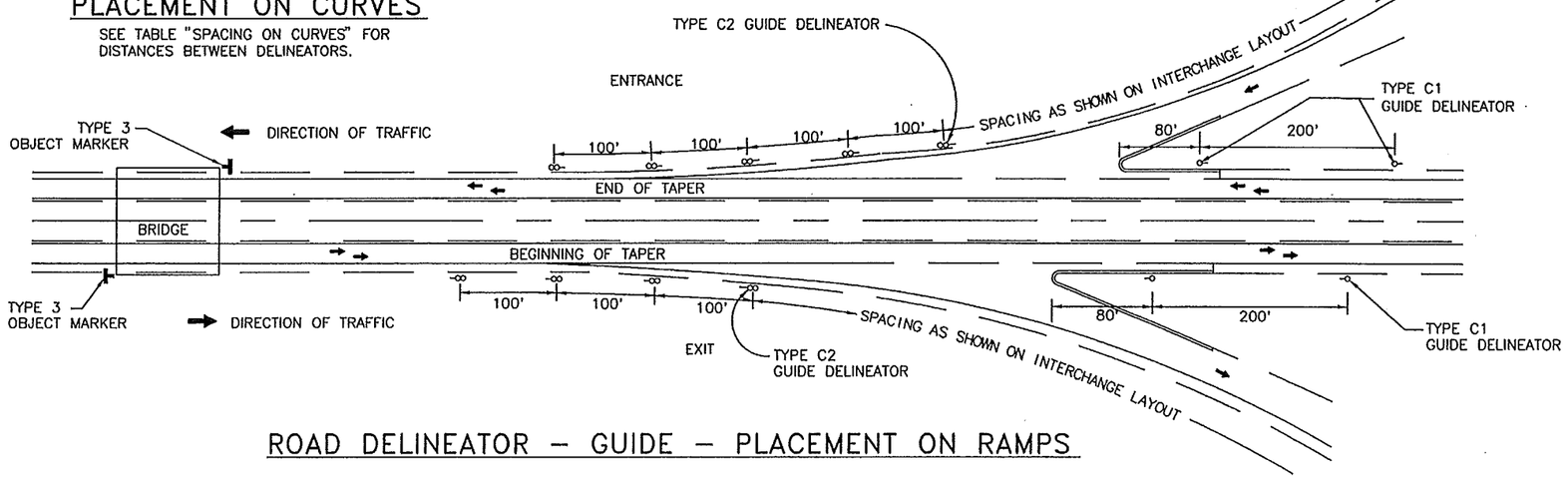

ROAD DELINEATOR – GUIDE – PLACEMENT ON RAMPS

NO.	DATE	REV. BY	DESCRIPTION

REVISIONS (OR CHANGE NOTICES)

NEW MEXICO DEPARTMENT OF TRANSPORTATION STANDARD DRAWING

ROAD DELINEATOR – GUIDE DETAILS

APPROVED DESIGN ENGINEER 1-11-05 DATE

DESIGNED BY___ DRAWN BY ___ CHECKED BY ___

703-01-2/3 SHEET 2 OF 3

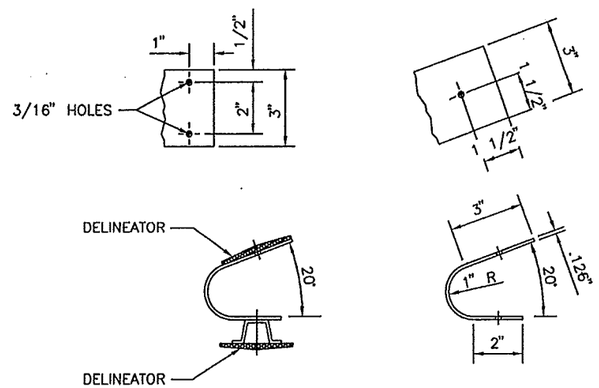

BIDIRECTIONAL DELINEATOR MOUNTING BRACKET

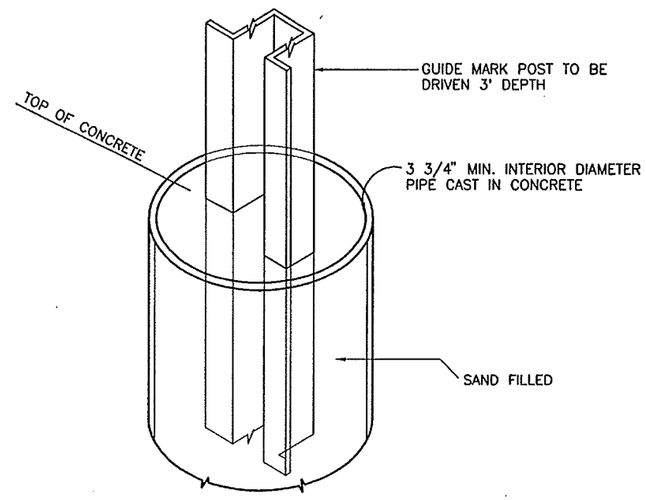

PLACEMENT IN CONCRETE MEDIAN PAVEMENT

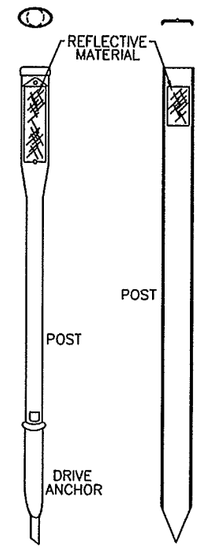

DRIVEABLE OR SEMI-DRIVEABLE DELINEATOR POSTS

INSTALL TO MANUFACTURER RECOMMENDATIONS

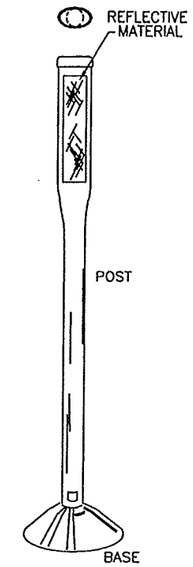

PAVEMENT SURFACE MOUNT

SURFACE MOUNTED DELINEATOR POSTS MAY USE EPOXY, OR HOT BITUMINOUS ADHESIVE TO MOUNT POST TO FLAT SURFACE.

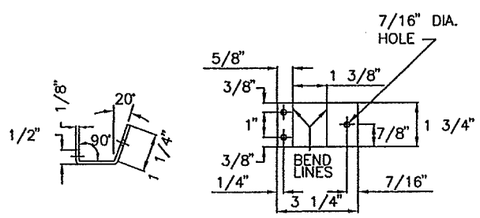

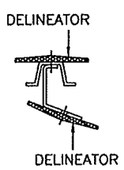

BIDIRECTIONAL DELINEATOR MOUNTING BRACKET

BRACKET MATERIAL: 8" x 3" x 1/8 OR
3 1/4" x 1 3/4" x 1/8"
FLAT-MILL
FINISH SHEET ALUMINUM 6061-T6
OR EQUIVALENT

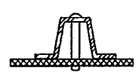

ALUMINUM PULL-THRU OR "POP" RIVET MOUNTING DETAIL

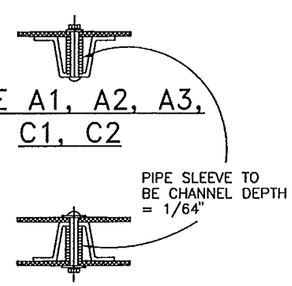

TYPE A1, A2, A3, C1, C2

ALL BACK-TO-BACK

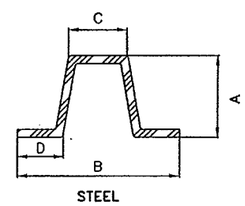

U-CHANNEL FRANKLIN

LB/FT	"A"	"B"	"C"	"D"
2.00	1.516	3.125	1.250	0.625

U-CHANNEL MARION

LB/FT	"A"	"B"	"C"	"D"
2.00	1.462	3.062	1.278	

2 LB/FT U-CHANNEL POST DETAIL CROSS SECTION

NOTE: FOR ANY CONTRACT OR PURCHASE, ALL POSTS TO BE SAME TYPE MATERIAL AND OF SAME SECTION.

NO.	DATE	REV. BY	DESCRIPTION

REVISIONS (OR CHANGE NOTICES)

NEW MEXICO DEPARTMENT OF TRANSPORTATION STANDARD DRAWING

DELINEATORS & OBJECT MARKERS

APPROVED _____ DESIGN ENGINEER _____ DATE 6-11-05

DESIGNED BY___ DRAWN BY ___ CHECKED BY ___

703-01-3/3 SHEET 3 OF 3

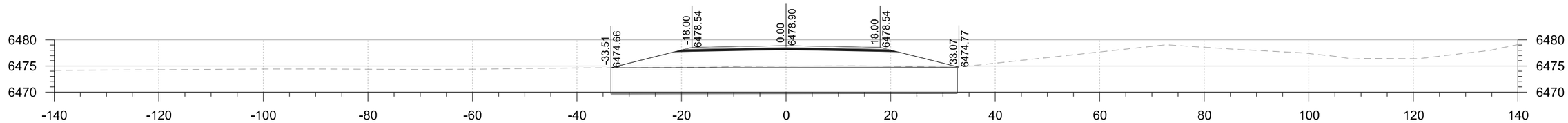

52+00

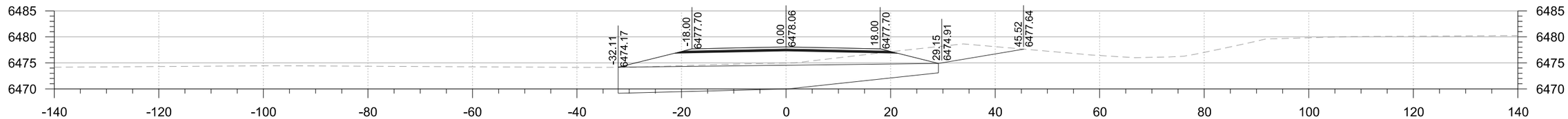

51+50

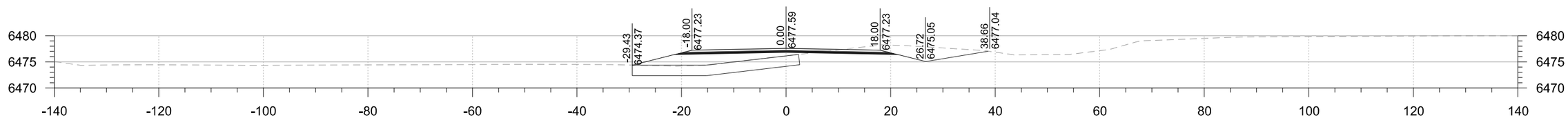

51+00

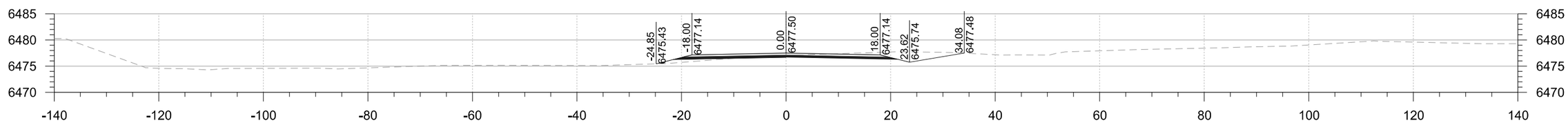

50+50

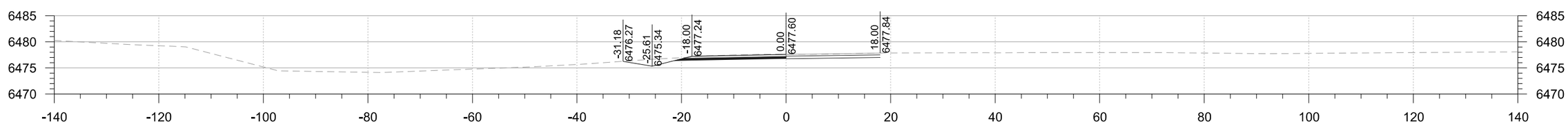

50+00

Station Range:

Alignment: ALLISON ROAD

Horizontal Scale: 1 : 20 | *Vertical Scale: 1 : 1* | *PCN: 6100112* | *FOR REFERENCE ONLY*

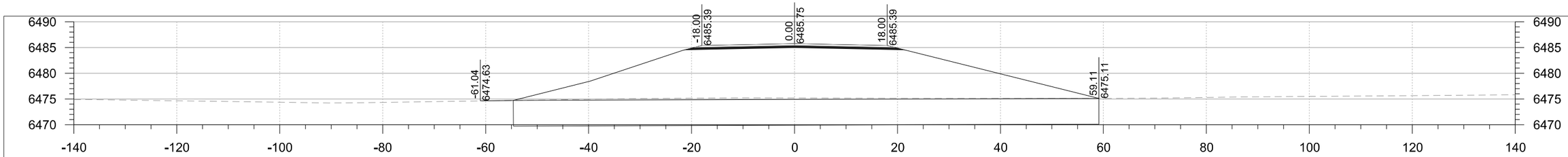

54+50

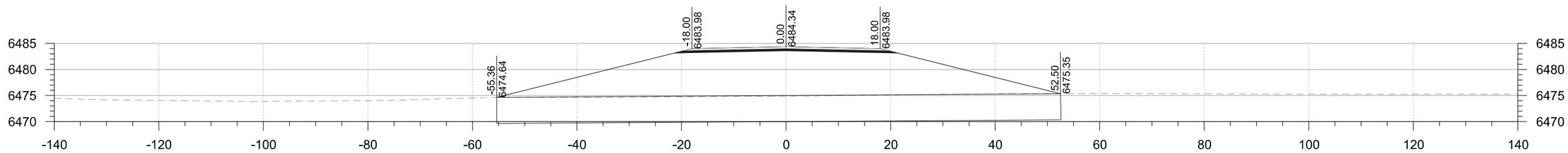

54+00

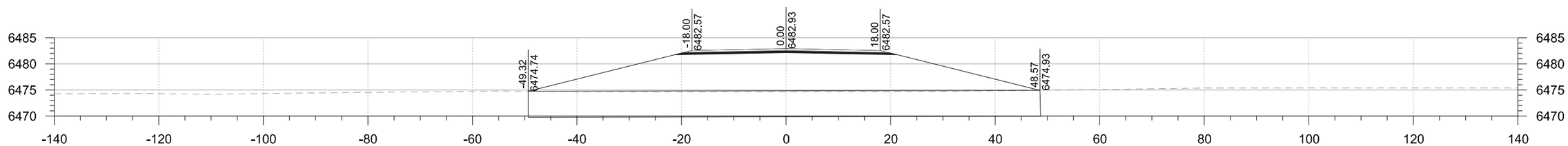

53+50

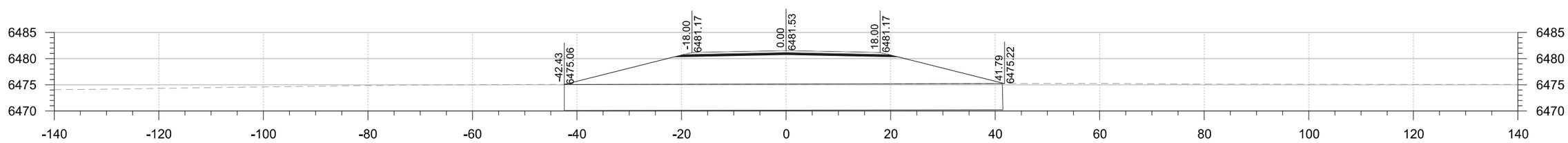

53+00

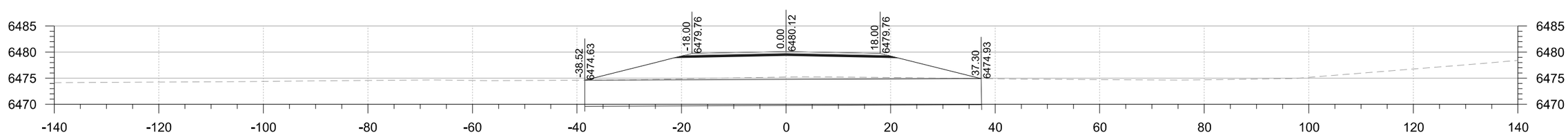

52+50

Station Range:

Alignment: ALLISON ROAD

Horizontal Scale: 1 : 20 | *Vertical Scale: 1 : 1* | *PCN: 6100112* | *FOR REFERENCE ONLY*

lemery
10/6/2016 11:34:32 AM

Design File: P:\20100245\Priority 1\Roadway Design\C7G801 Priority 1 Cross Sections.dgn

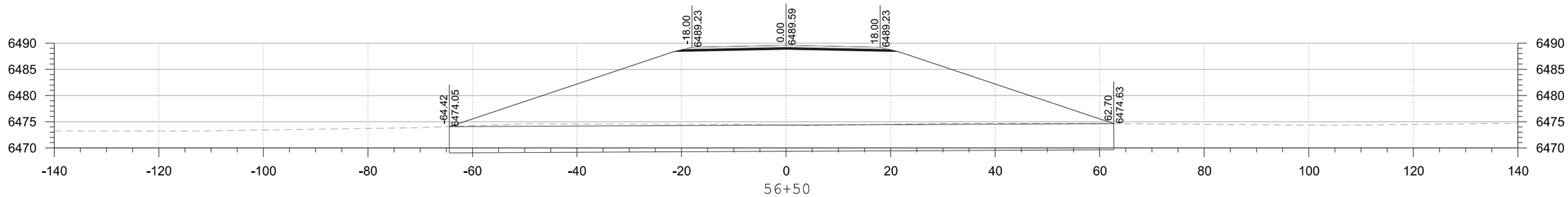

56+50

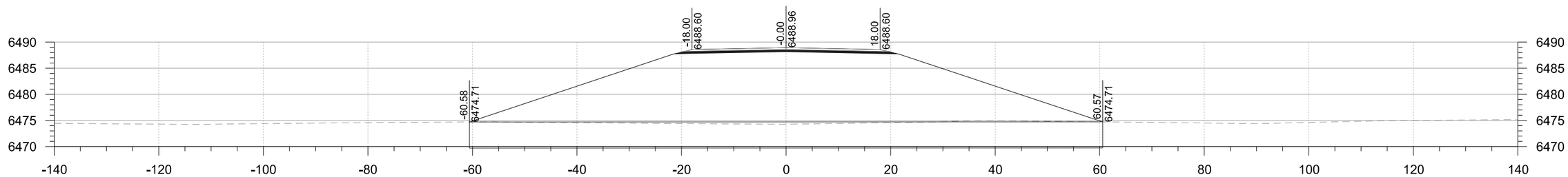

56+00

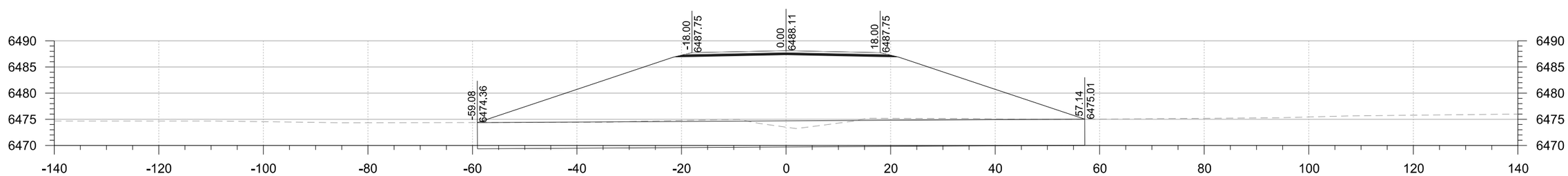

55+50

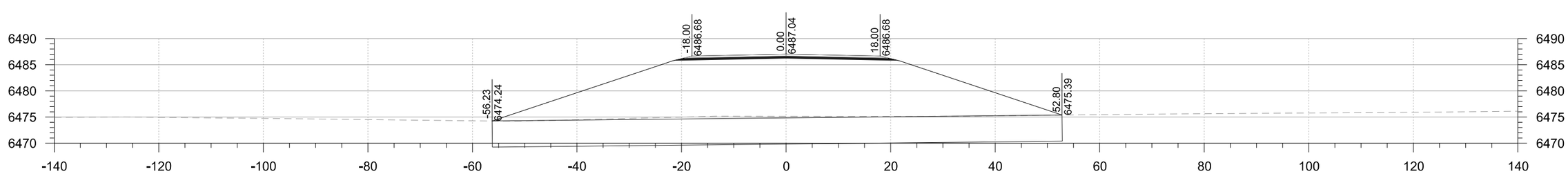

55+00

Alignment: ALLISON ROAD

Station Range:

Horizontal Scale: 1 : 20	*Vertical Scale: 1 : 1*	*PCN: 6100112*	*FOR REFERENCE ONLY*

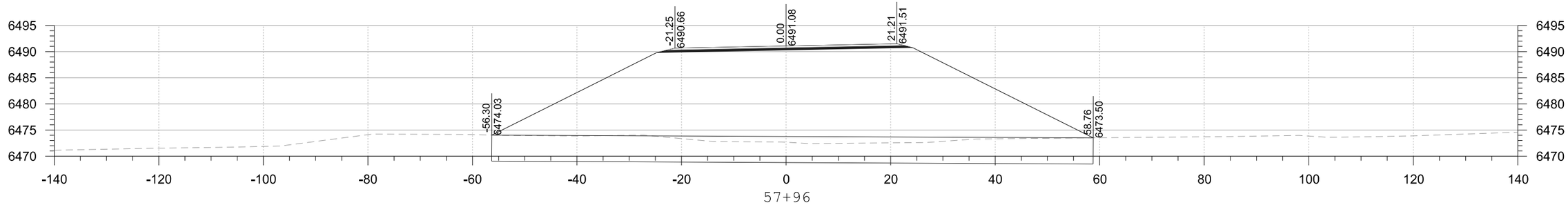

57+96

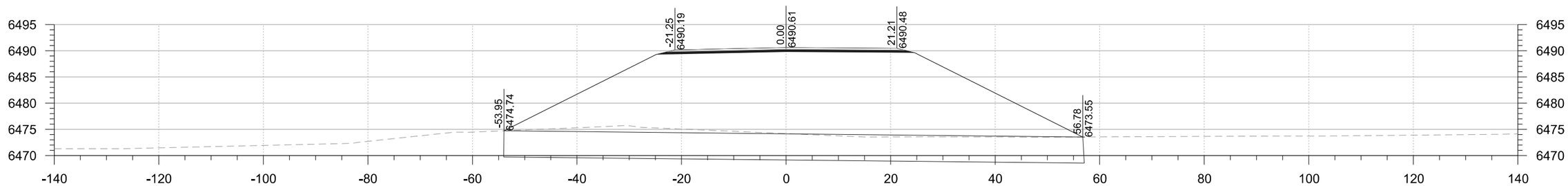

57+50

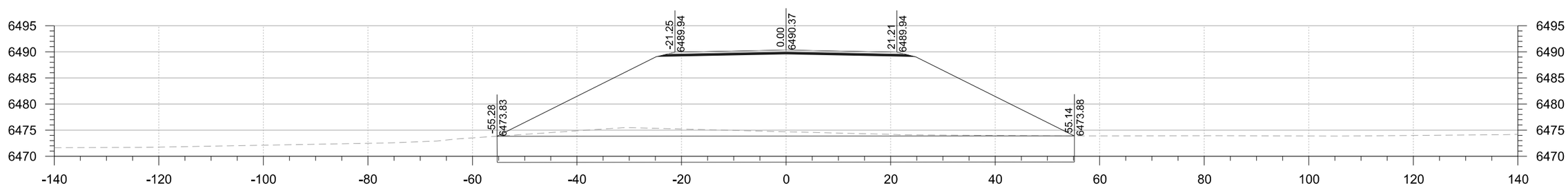

57+26

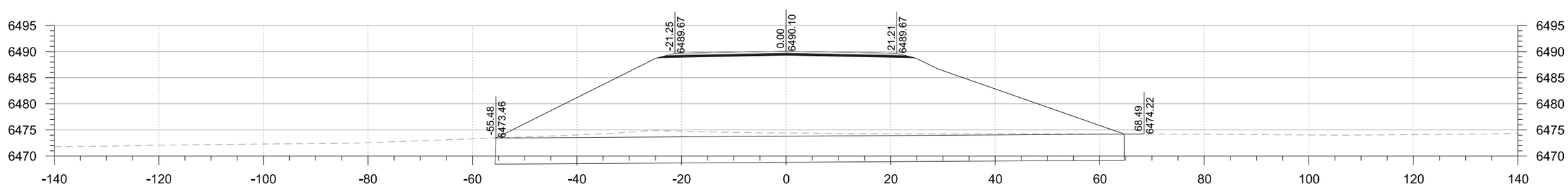

57+00

Station Range:

Alignment: ALLISON ROAD

Horizontal Scale: 1 : 20 | *Vertical Scale: 1 : 1* | *PCN: 6100112* | *FOR REFERENCE ONLY*

Station Range:

Alignment: ALLISON ROAD

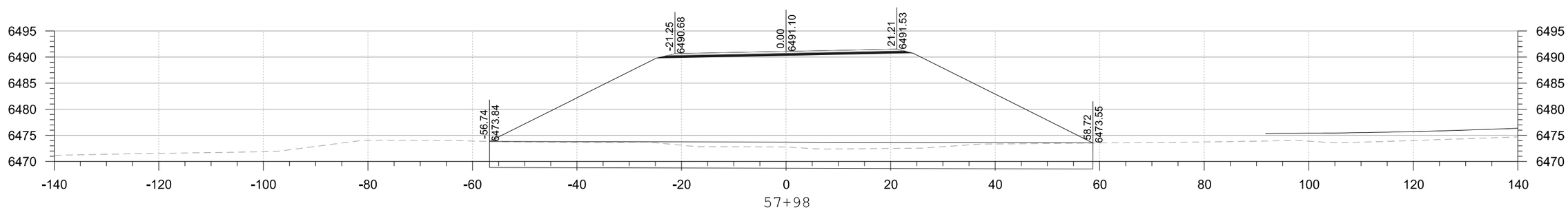

Horizontal Scale: 1 : 20 | *Vertical Scale: 1 : 1* | *PCN: 6100112* | *FOR REFERENCE ONLY*

lemery
10/6/2016 11:34:33 AM

Design File: P:\20100245\Priority 1\Roadway Design\C7G801 Priority 1 Cross Sections.dgn

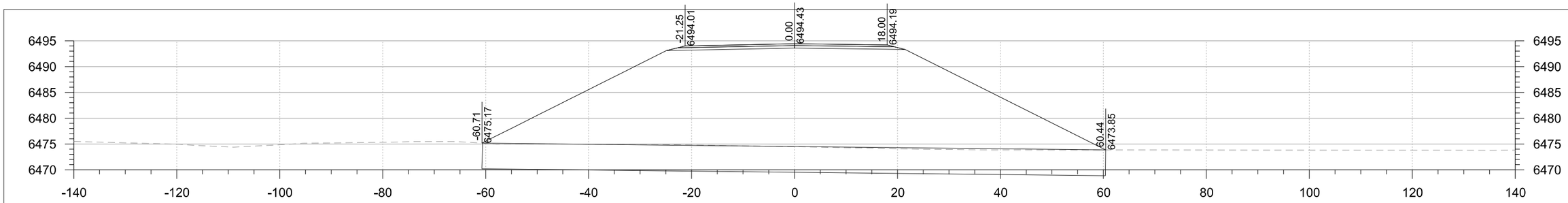

61+50

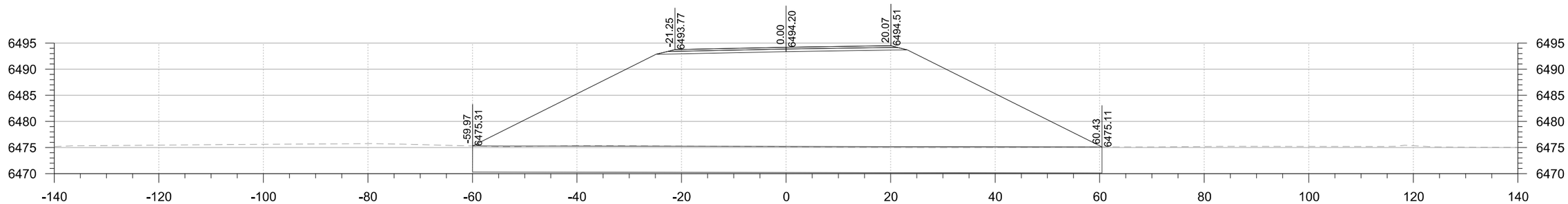

61+00

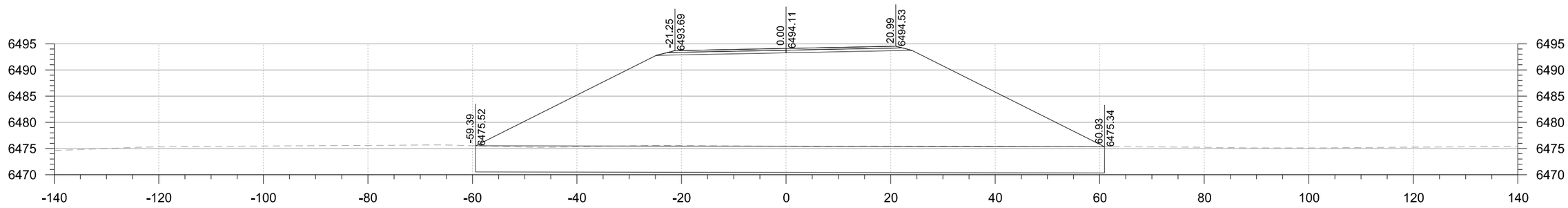

60+92

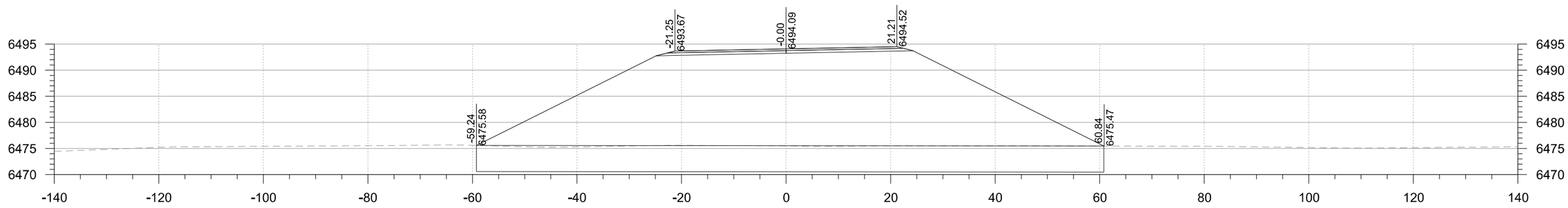

60+90

Alignment: ALLISON ROAD

Station Range:

Horizontal Scale: 1 : 20 *Vertical Scale: 1 : 1* *PCN: 6100112* *FOR REFERENCE ONLY*

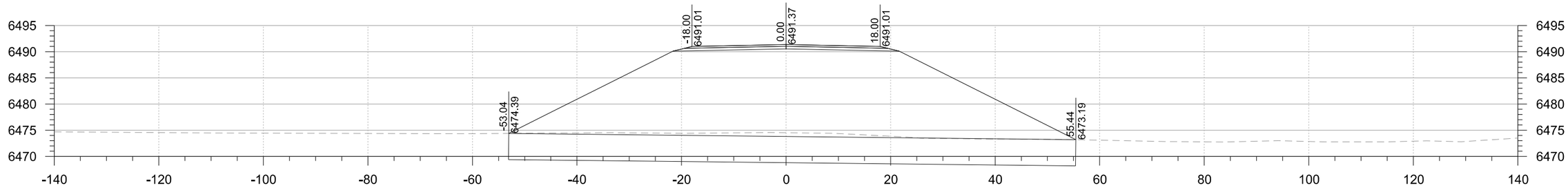

63+00

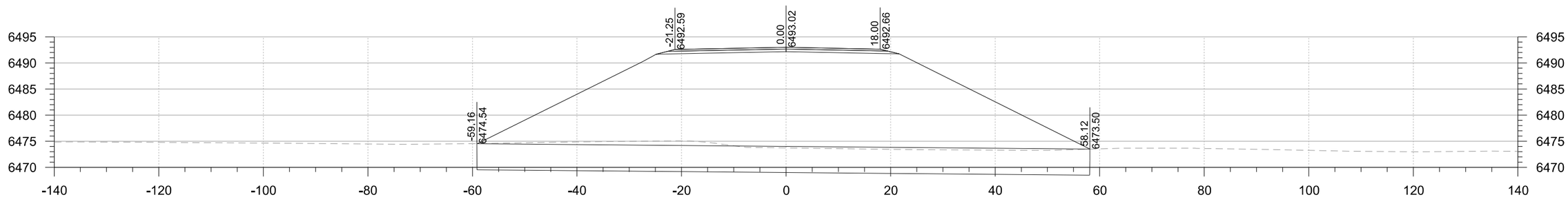

62+50

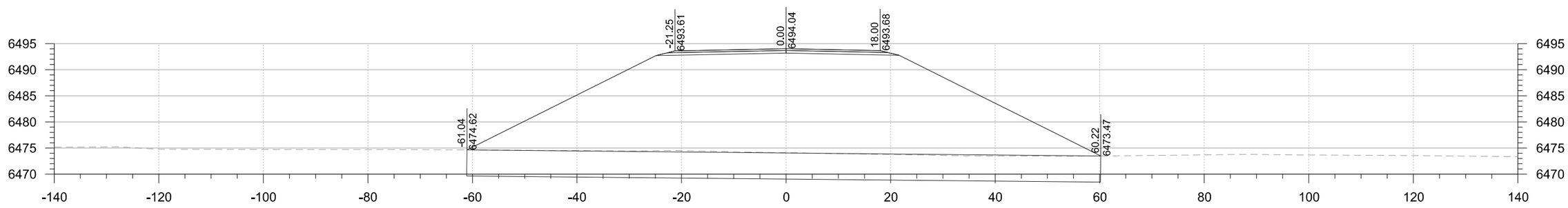

62+00

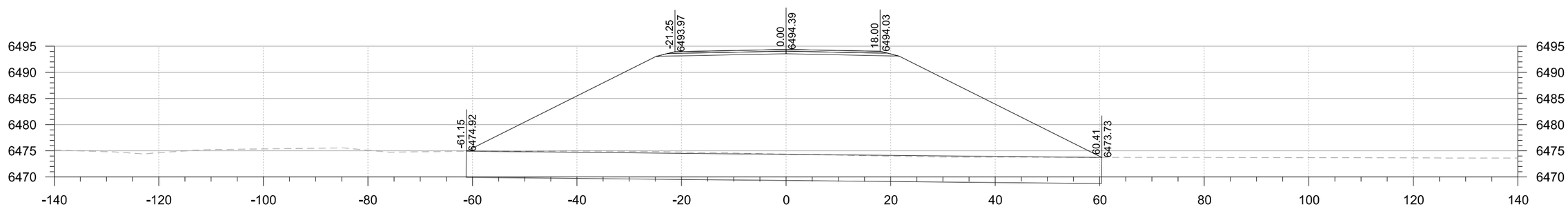

61+62

Alignment: ALLISON ROAD

Station Range:

Horizontal Scale: 1 : 20 | *Vertical Scale: 1 : 1* | *PCN: 6100112* | *FOR REFERENCE ONLY*

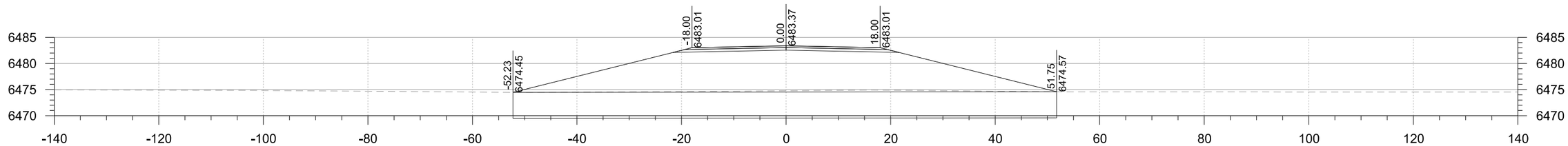

65+00

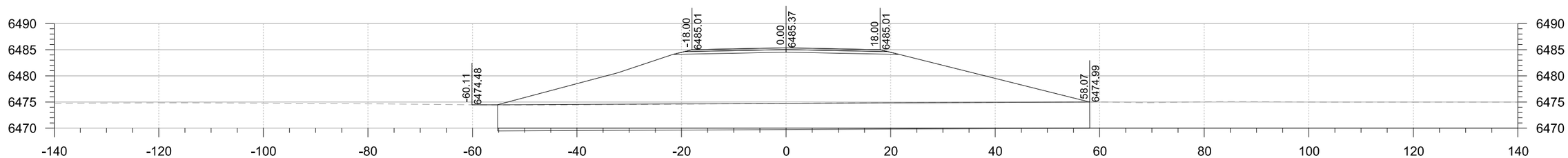

64+50

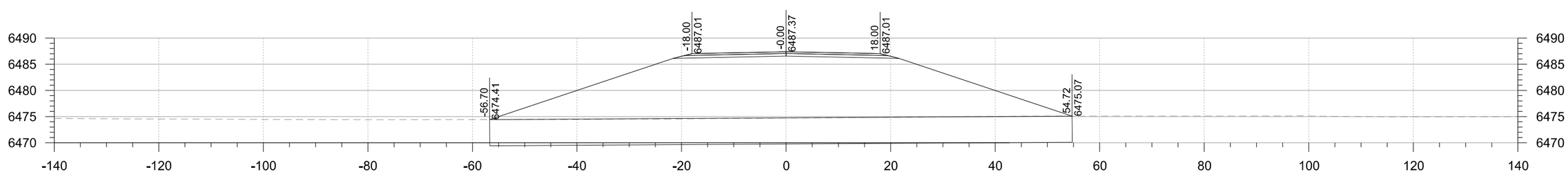

64+00

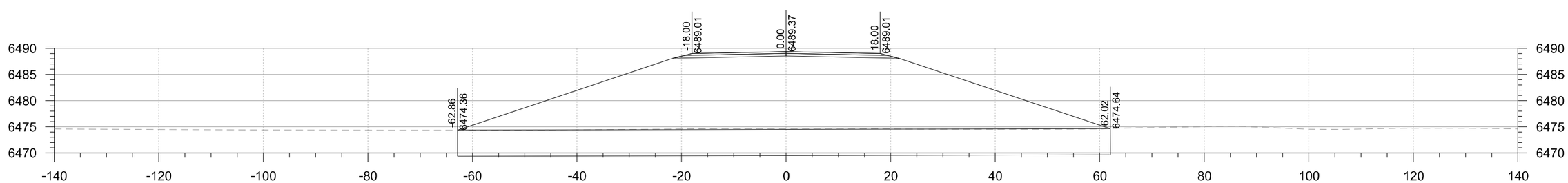

63+50

Alignment: ALLISON ROAD

Station Range:

Horizontal Scale: 1 : 20 | *Vertical Scale: 1 : 1* | *PCN: 6100112* | *FOR REFERENCE ONLY*

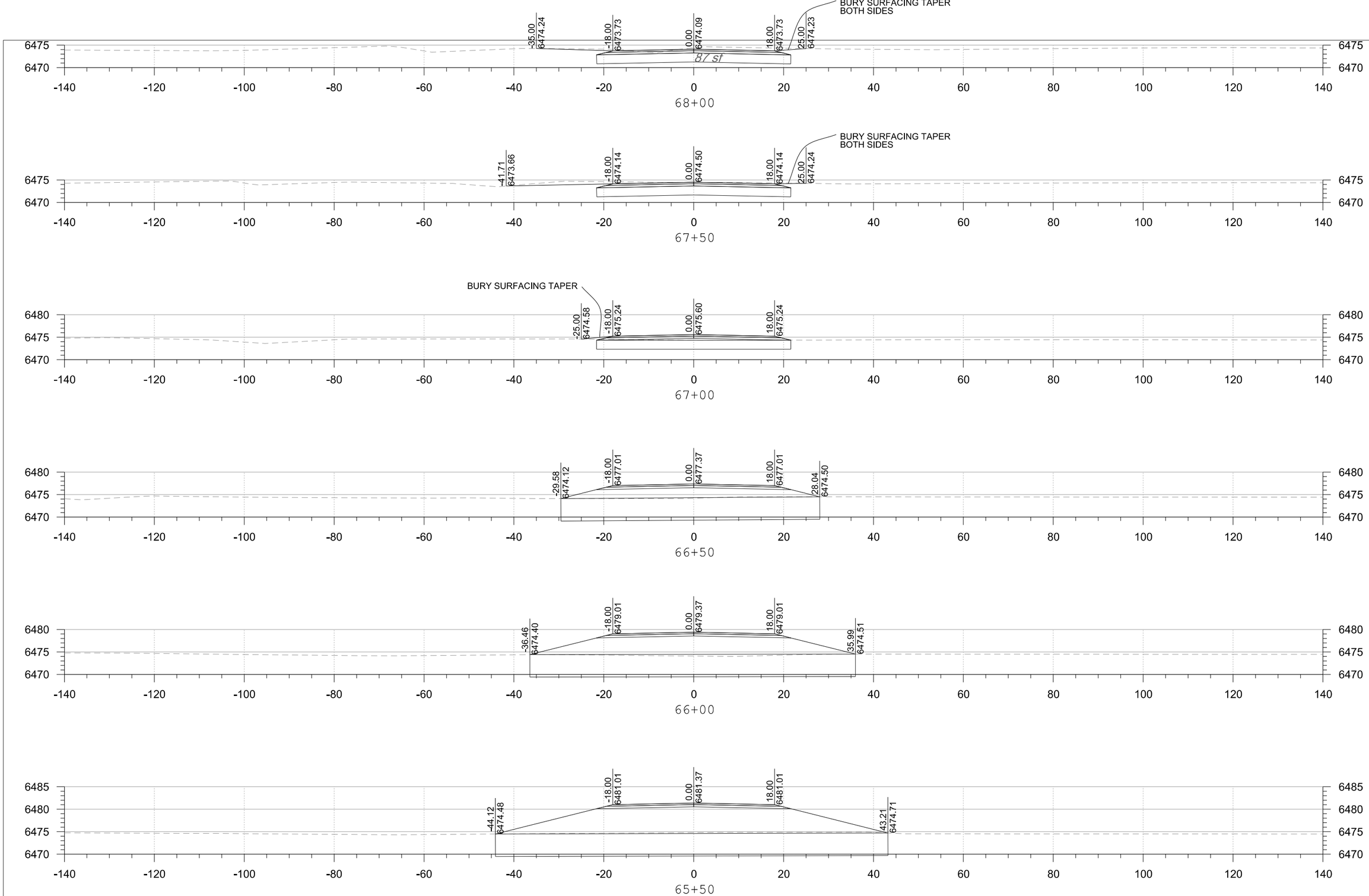

Station Range:

Alignment: ALLISON ROAD

Horizontal Scale: 1 : 20 | *Vertical Scale: 1 : 1* | *PCN: 6100112* | *FOR REFERENCE ONLY*

lemery
10/6/2016 11:34:34 AM

Design File: P:\20100245\Priority 1\Roadway Design\C7G801 Priority 1 Cross Sections.dgn

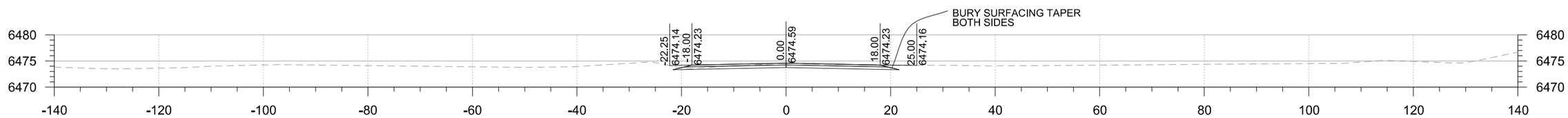

69+45

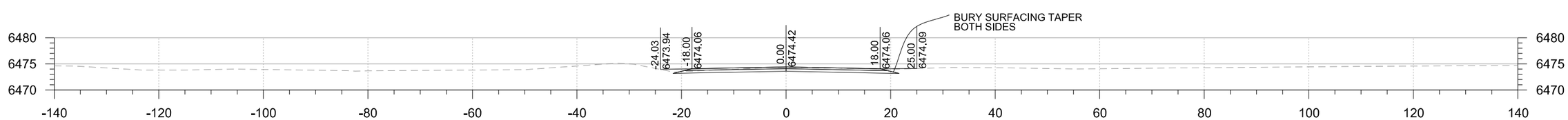

69+00

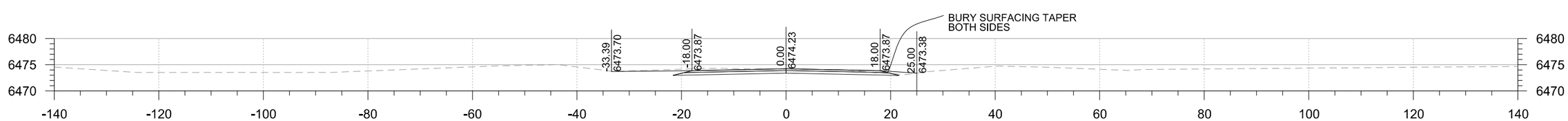

68+50

Alignment: ALLISON ROAD Station Range:

Horizontal Scale: 1 : 20	Vertical Scale: 1 : 1	PCN: 6100112	FOR REFERENCE ONLY

lemery
10/6/2016 11:34:34 AM Design File: P:\20100245\Priority 1\Roadway Design\C7G801 Priority 1 Cross Sections.dgn

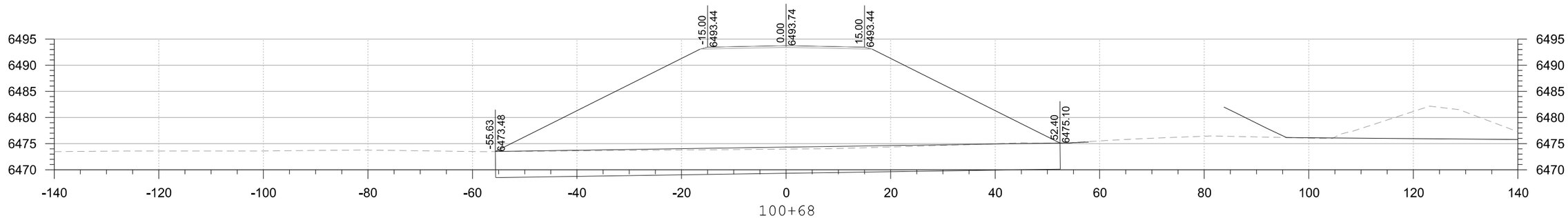

100+68

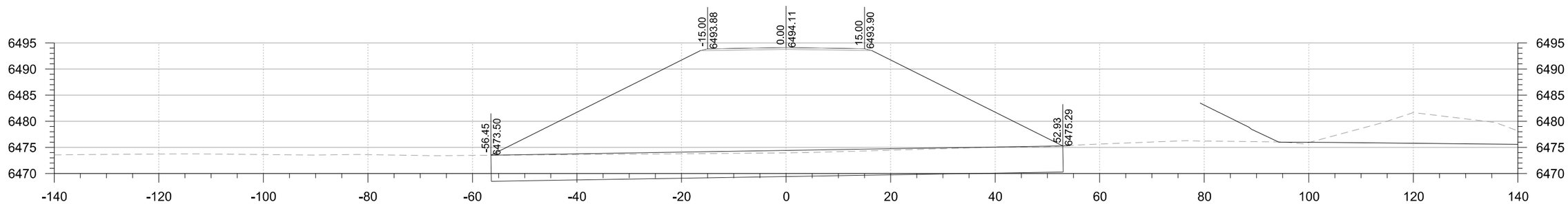

100+50

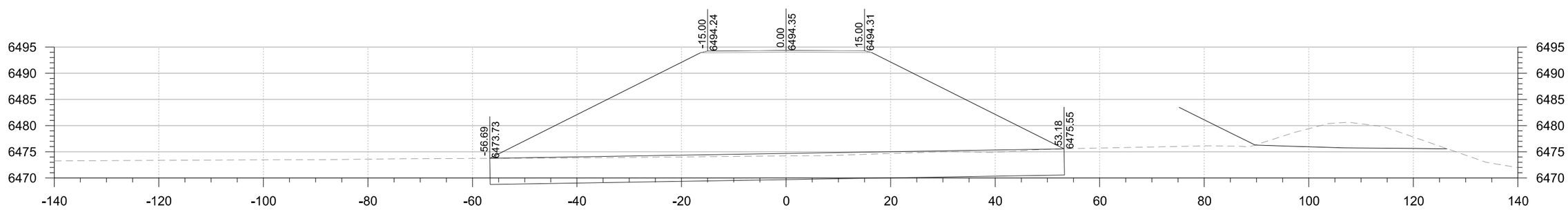

100+18

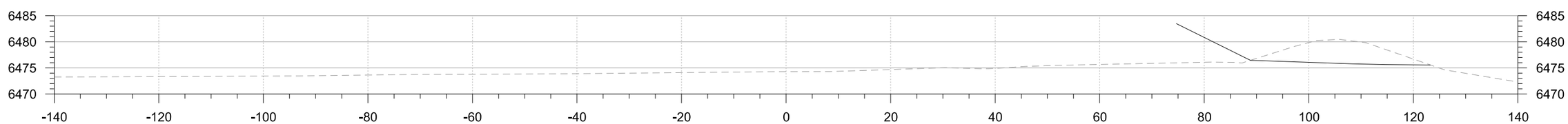

100+14

Station Range:

Alignment: TO STA 61+40

Horizontal Scale: 1 : 20 | *Vertical Scale: 1 : 1* | *PCN: 6100112* | *FOR REFERENCE ONLY*

lemery
10/6/2016 11:34:34 AM

Design File: P:\20100245\Priority 1\Roadway Design\C7G801 Priority 1 Cross Sections.dgn

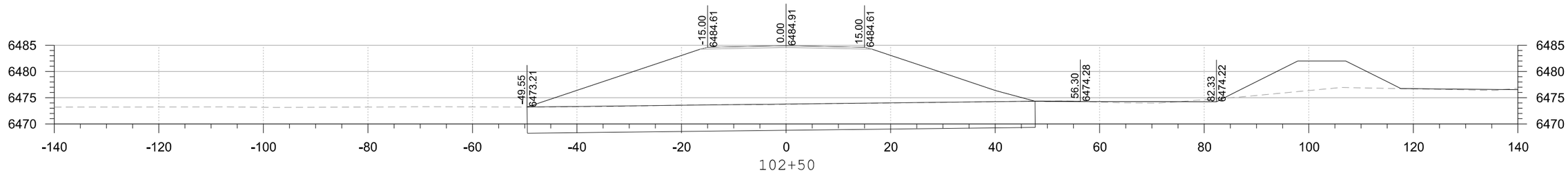

102+50

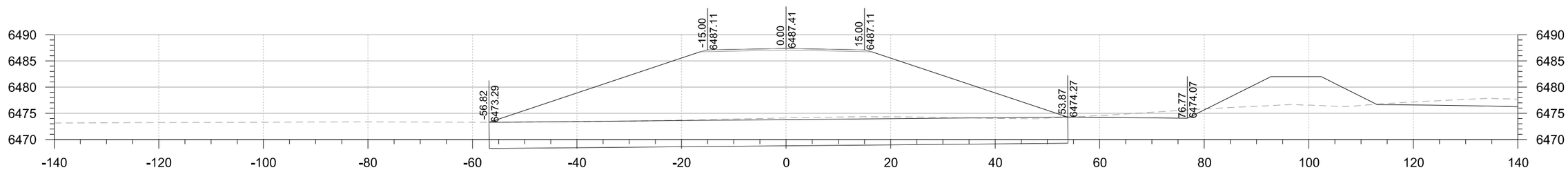

102+00

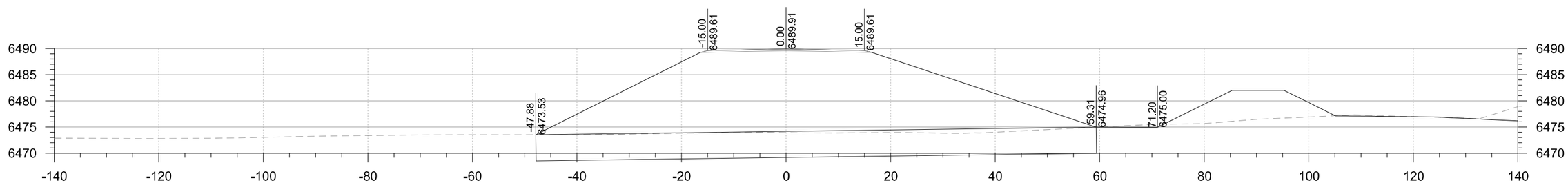

101+50

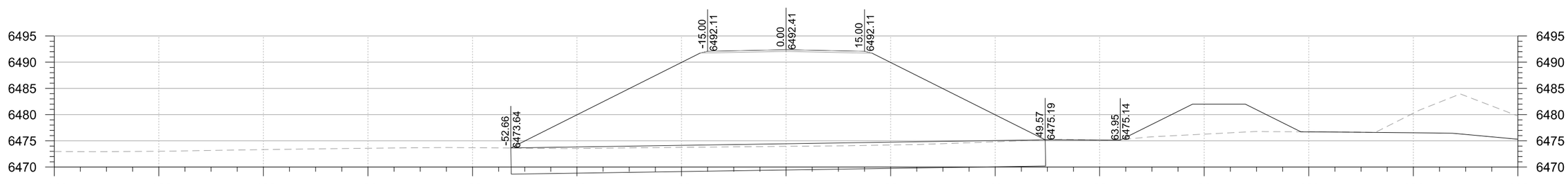

101+00

Alignment: TO STA 61+40 Station Range:

Horizontal Scale: 1 : 20 *Vertical Scale: 1 : 1* *PCN: 6100112* *FOR REFERENCE ONLY*

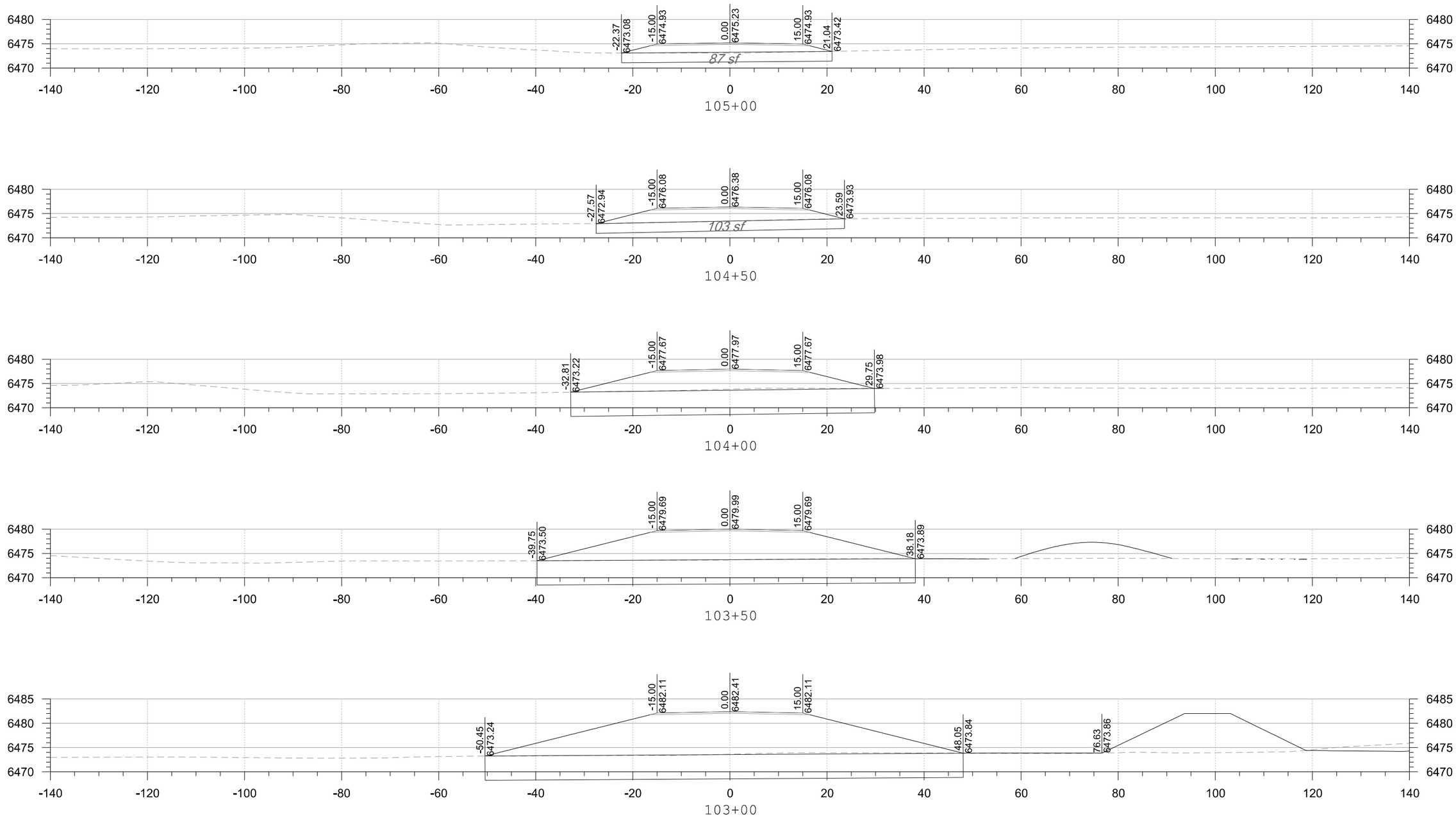

Station Range:

Alignment: TO STA 61+40

Horizontal Scale: 1 : 20 | *Vertical Scale: 1 : 1* | *PCN: 6100112* | *FOR REFERENCE ONLY*

lemery
10/6/2016 11:34:34 AM Design File: P:\20100245\Priority 1\Roadway Design\C7G801 Priority 1 Cross Sections.dgn

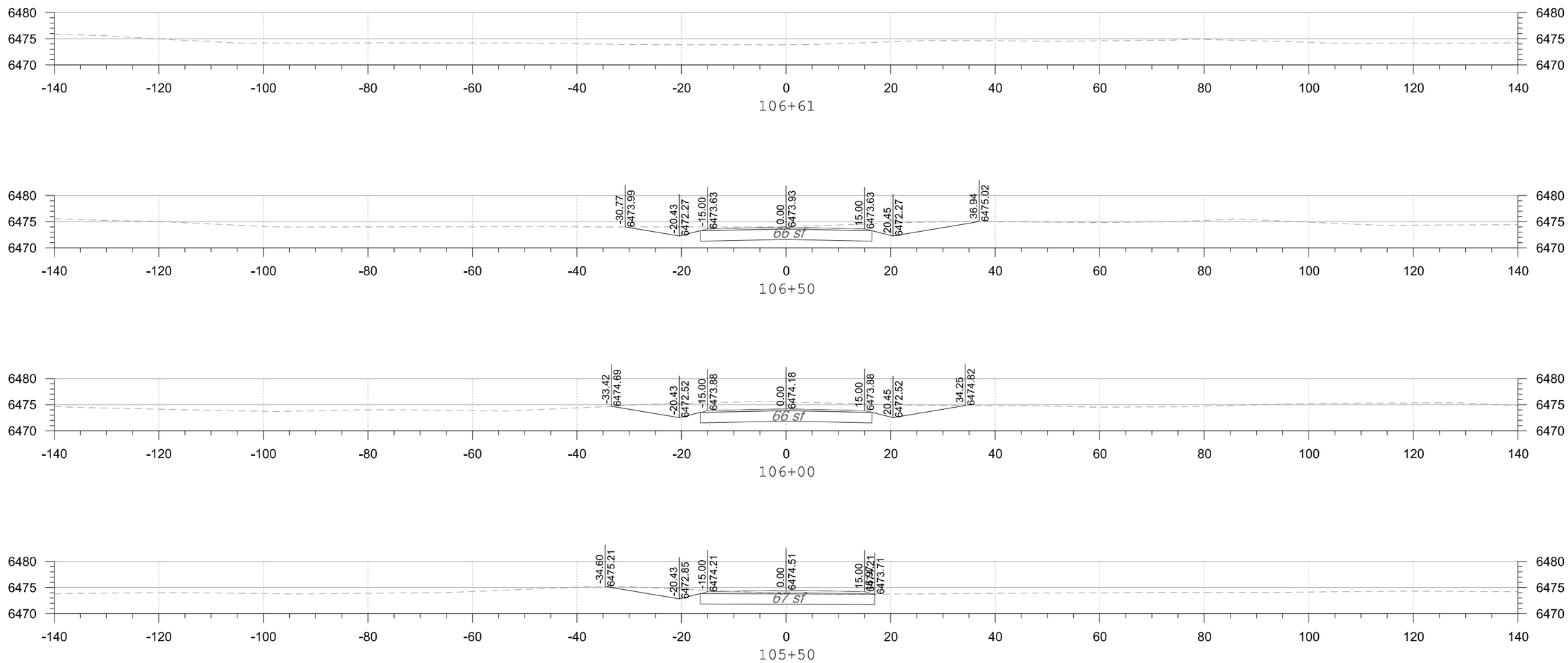

Alignment: TO STA 61+40

Station Range:

Horizontal Scale: 1 : 20 | *Vertical Scale: 1 : 1* | *PCN: 6100112* | *FOR REFERENCE ONLY*